ORDER NO. ITD89021221C2

Manuale di Servizio

Monitor a Colori LCD

Modello : TC-MC3U

Telaio N. 3N52E-I

Caratteristiche

Alimentazione :	9,5 V c.c. 4 modi di funzionamento : (Adattatore c.a./Cavo adattatore per auto, Batterie a secco, Batteria ricaricabile)
Consumo :	Funzionamento in c.a. : 5,5 W Funzionamento in c.c. : 2,8 W Caricamento c.c. : 7,0 W (Batteria ricaricabile)
Sistema televisivo :	Sistemi PAL
Dimensione dello schermo :	7,5 cm
Numero di pixel :	102.672 (276 verticale x 372 orizzontale)
Angolo di visualizzazione :	±40° (orizzontale) ±30° (verticale)
Presa d'ingresso video/audio :	Video 1,0 V c-c Impedenza 75Ω Audio 0,5 V rms Impedenza 600Ω
Impedenza di auricolare :	8Ω
Dimensioni :	Alt. : 98 mm Largh. : 93 mm Prof. : 24 mm
Peso :	160 g senza le batterie

Dati tecnici soggetti a cambiamenti senza preavviso.
Peso e dimensioni indicati sono approssimativi.

Panasonic

Matsushita Electric Industrial Co., Ltd.
Central P. O. Box 288, Osaka 530-91, Japan

INDICE

REGOLAZIONI 3
VEDUTE CONDUTTORE 4
SCHEMA A BLOCCHI 6
DISPOSIZIONE DELLE PARTI 8
ELENCO PARTI DI RICAMBIO 9

REGOLAZIONI

PREPARAZIONE	PROCEDURA DI REGOLAZIONE
TENSIONE B 1. Alimentare JS702 con una tensione continua +9,5 V. 2. Applicare un monoscopio Philips. 3. Collegare un voltmetro DC al catodo di D722.	1. Regolare VR701 in modo da ottenere 10,1 ± 0,01 V al catodo di D722.
TENSIONE COMUNE 1. Applicare un segnale bianco e nero.	1. Regolare il controllo di luminosità (VR601) sul punto in cui lo sfarfallio si nota di più. 2. Regolare COM Adj. (VR604) in modo da eliminare lo sfarfallio.
BILANCIAMENTO DEL BIANCO 1. Applicare un segnale bianco e nero. 2. Posizionare i controlli : Luminosità (VR601) ..... al centro	1. Regolare alternativamente VR602 e VR603 per ottenere una normale immagine in bianco e nero. **Nota :** Assicurarsi di eseguire le tarature utilizzando la lampada fluorescente incorporata. Utilizzando un'altra fonte di luce, le tarature possono risultare non corrette.
POSIZIONE DELL'IMMAGINE 1. Applicare un monoscopio Philips.	1. Regolare fo Adj. (VR401) per ottenere la miglior centratura orizzontale.

PREPARAZIONE	PROCEDURA DI REGOLAZIONE	FOMA D'ONDA
LIVELLO COLORE (VERDE) 1. Collegare un oscilloscopio al pin 20 di IC601. 2. Applicare un segnale bianco e nero.	1. Regolare il controllo di sub-luminosità (VR157) in modo da ottenere la forma d'onda di Fig. 1. 2. Collegare l'oscilloscopio al pin 12 di IC601. 3. Regolare il controllo di sub-contrasto (VR151) in modo da ottenere la forma d'onda di Fig. 2.	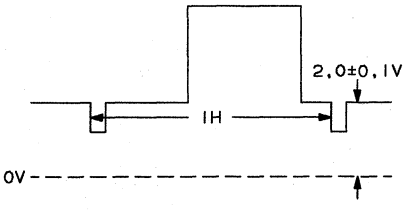 **Fig. 1** 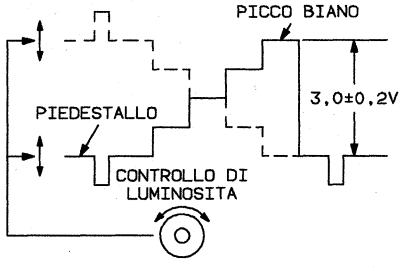 **Fig. 2**

VEDUTE CONDUTTORE

SCHEDA PRINCIPALE TNP890239-31

I.C.	IC401

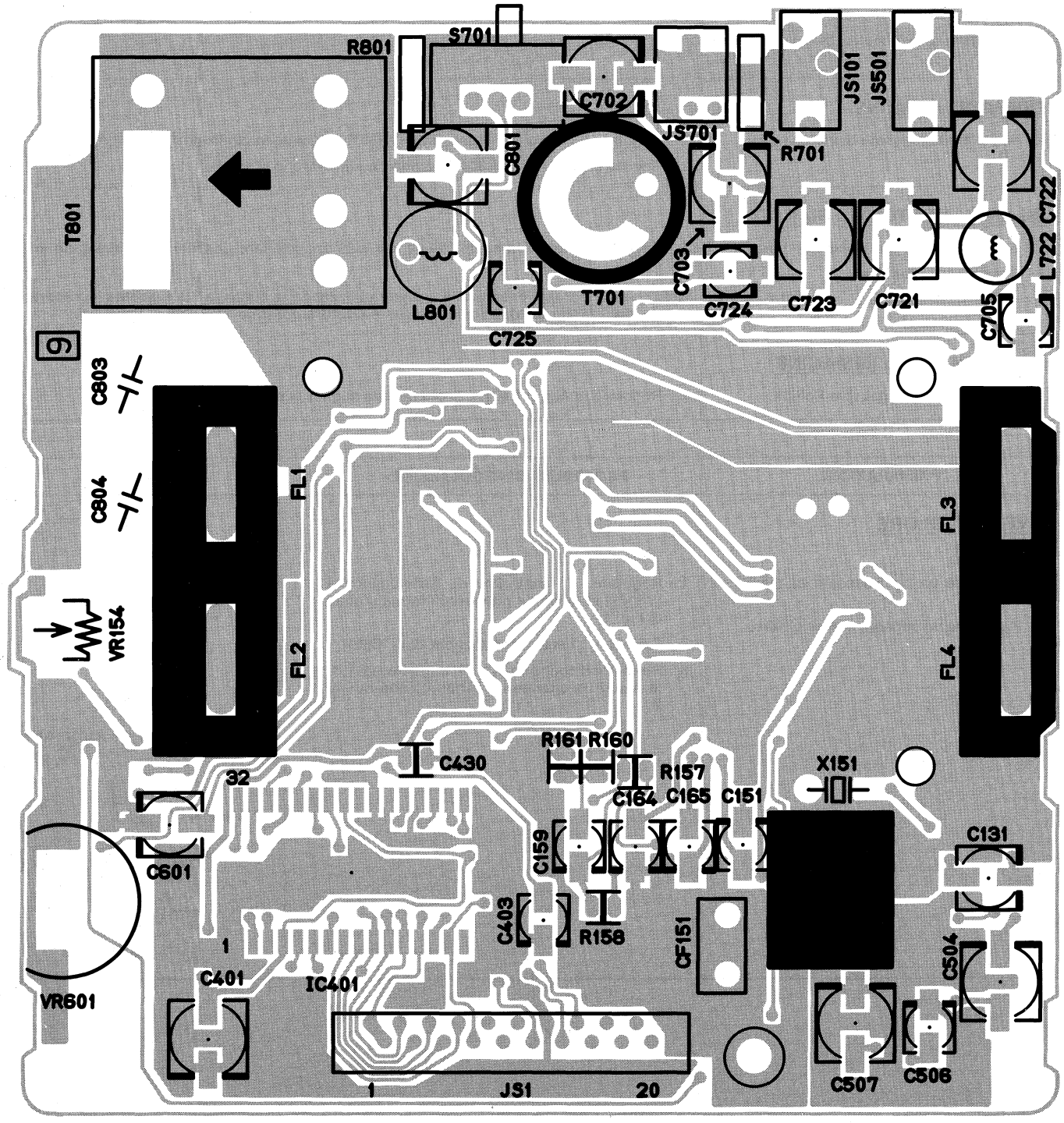

SCHEDA PRINCIPALE TNP890239-31

I.C.	IC701 IC151 IC501 IC601
TRANSISTOR	Q701 Q131 Q132 Q133 Q802 Q801
DIODE	D702 D151 D721 D701 D723 D722 D724 D602 D152 D603

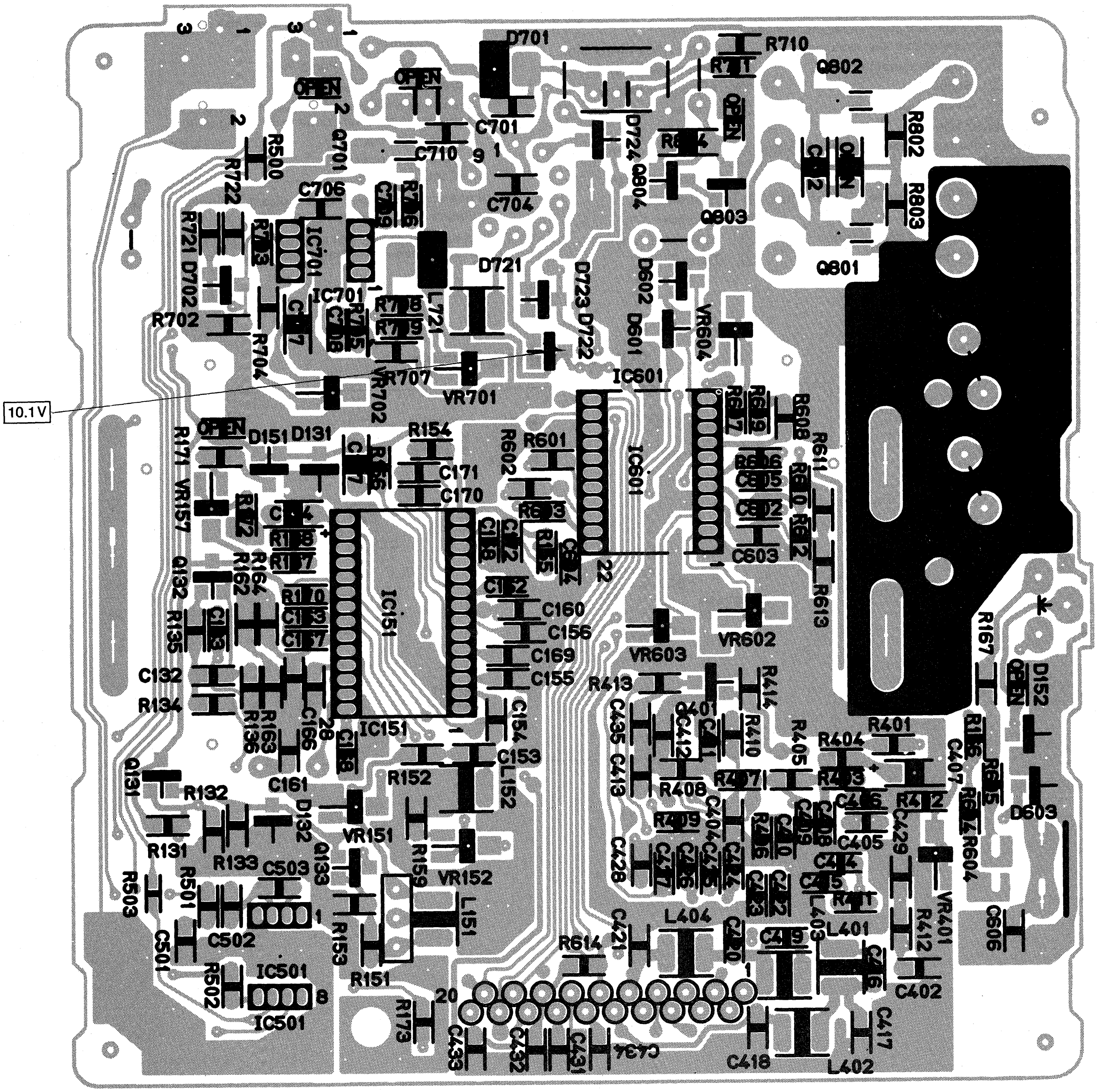

SCHEMA A BLOCCHI PER IL MODELLO TC-MC3U (TELAIO 3N52E-I)

AVVERTENZA IMPORTANTE AI FINI DELLA SICUREZZA

I componenti identificati da marchio ⚠ presentano speciali caratteristiche importanti ai fini della sicurezza. In caso di sostituzione di uno qualsiasi di questi componenti, usate solo parti consigliate dal produttore.

Nota :

1. RESISTORI
   Tutti i resistori sono del tipo a carbonio da 1/10 W, a meno che non sia diversamente indicato come di seguito specificato :
   L'unità di resistenza è espressa in OHM [Ω] (K=1.000 , M=1.000.000).
   - ○ : Non infiammabile
   - △ : Solido
   - ⊠ : Avvolgimento in filo
   - ⊠ : Ossido metallico
   - ◎ : Pellicola metallico
   - ⊗ : Fusible
2. CONDENSATORI
   Tutti i condensatori sono del tipo ceramico a 50 V, a meno che non sia diversamente indicato come di seguito specificato :
   L'unità di capacità in μF, a meno che non sia diversamente indicato.
   - ⊗ : Compensazione di temperatura
   - Ⓜ : Poliestere
   - ⓜ : Poliestere metallizzato
   - ⊠ : Polipropilene
   - ⁺‖⁻ : Elettrolitico
   - NP‖ : Bipolare
   - Ⓣ : Tantalo immerso
   - Ⓩ : Tipo - Z
3. BOBINA
   L'unità di induttanza è in μH, a meno che non sia diversamente indicato.
4. PUNTO PROVA
   ⚲ : Posizione di Punto Prova
5. MISURAZIONE DI TENSIONE
   La tensione è misurata da un Voltmetro DC.
   Le condizioni di misurazione sono le seguenti :
   - Alimentazione ..... 9,5 V c.c.
   - Segnale di ricezione ..... Segnale di barra colore
   - Controlli utente ..... Posizione massima
6. Il numero cerchiato di rosso indica il numero della forma d'onda.
   (Vedi tavola diagrammi forme d'onda.)
7. Il presente schema a blocchi è quello che fa testo al momento della stampa ed è soggetto a modifiche senza preavviso.

COLLEGAMENTO PIEDINI

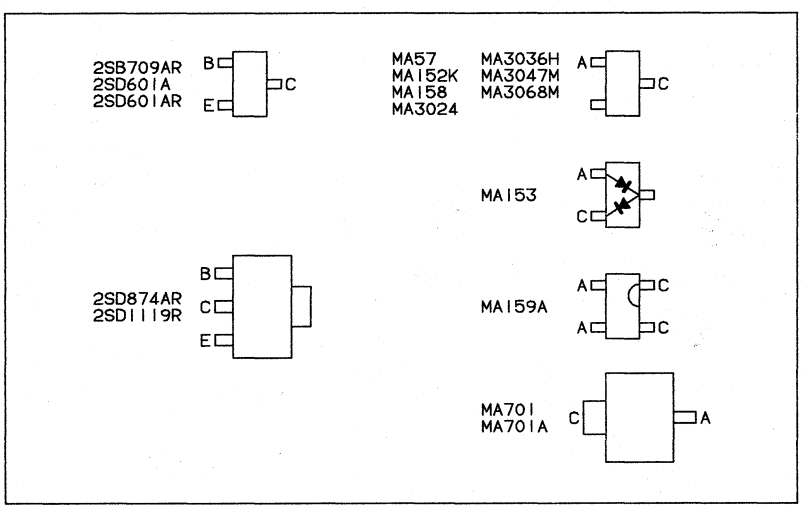

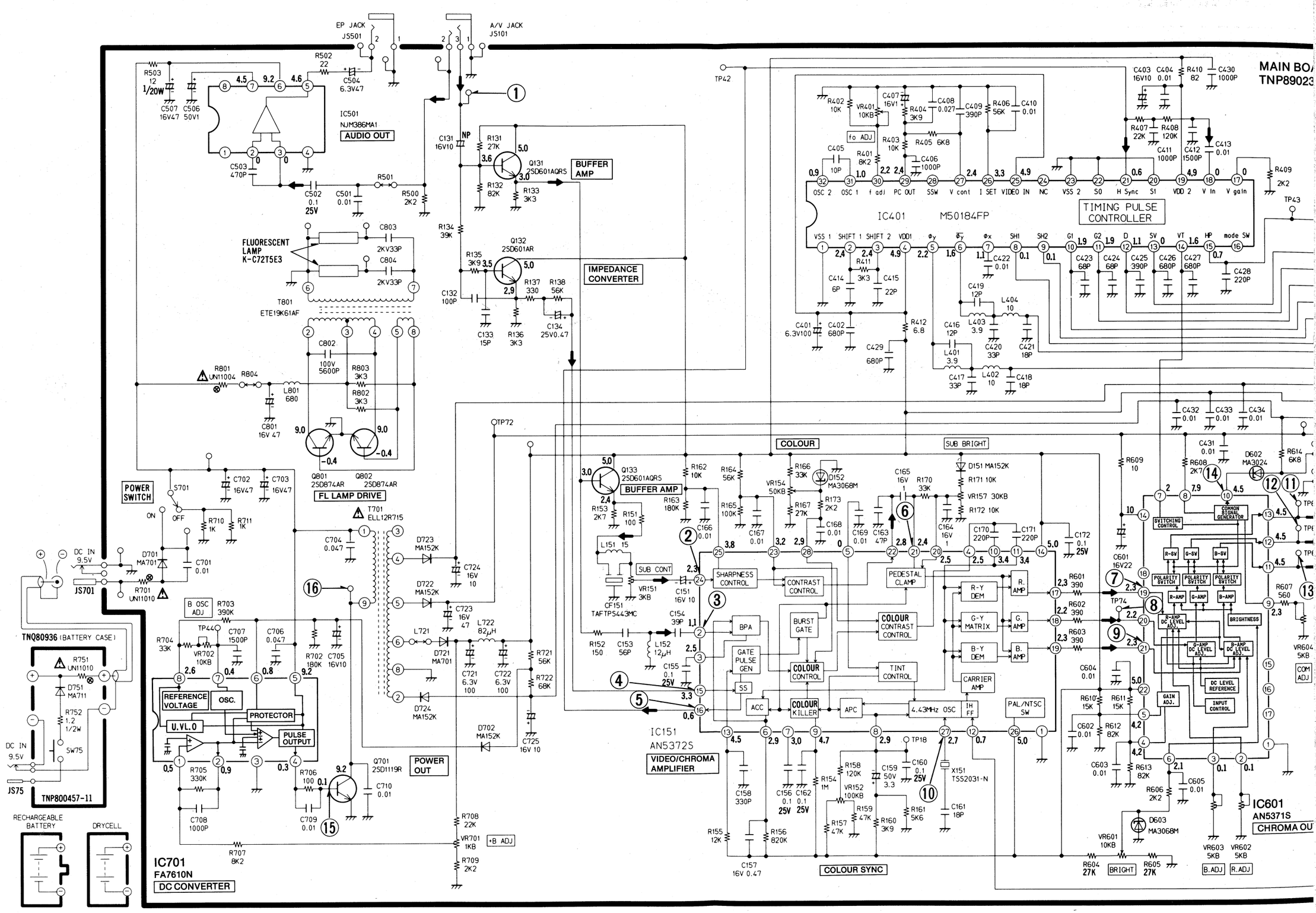
MAIN BO
TNP89023
EP JACK
JS501
A/V JACK
JS101
IC501
NJM386MA1
AUDIO OUT
BUFFER AMP
Q131
2SD601AQRS
Q132
2SD601AR
IMPEDANCE CONVERTER
FLUORESCENT LAMP
K-C72T5E3
T801
ETE19K61AF
FL LAMP DRIVE
Q801
2SD874AR
Q802
2SD874AR
POWER SWITCH
T701
ELL12R715
POWER OUT
Q701
2SD1119R
DC IN
9.5V
JS701
TNQ80936 (BATTERY CASE)
TNP800457-11
JS75
RECHARGEABLE BATTERY
DRYCELL
IC701
FA7610N
DC CONVERTER
REFERENCE VOLTAGE
OSC.
PROTECTOR
U.VL.O
PULSE OUTPUT
B OSC ADJ
+B ADJ
IC401
M50184FP
TIMING PULSE CONTROLLER
fo ADJ
OSC 2
OSC 1
f adj
PC OUT
SSW
V cont
I SET
VIDEO IN
NC
VSS 2
SO
H Sync
SI
VDD 2
V In
V gain
VSS 1
SHIFT 1
SHIFT 2
VDD1
SH1
SH2
G1
G2
D
SV
VT
HP
mode SW
COLOUR
SUB BRIGHT
SUB CONT
SHARPNESS CONTROL
CONTRAST CONTROL
PEDESTAL CLAMP
BPA
BURST GATE
GATE PULSE GEN
COLOUR CONTRAST CONTROL
COLOUR CONTROL
TINT CONTROL
SS
ACC
COLOUR KILLER
APC
4.43MHz OSC
IH FF
CARRIER AMP
PAL/NTSC SW
R-Y DEM
G-Y MATRIX
B-Y DEM
R. AMP
G. AMP
B. AMP
IC151
AN5372S
VIDEO/CHROMA AMPLIFIER
COLOUR SYNC
SWITCHING CONTROL
COMMON SIGNAL GENERATOR
POLARITY SWITCH
R-AMP
G-AMP
B-AMP
R-AMP DC LEVEL ADJ.
G-AMP DC LEVEL ADJ.
B-AMP DC LEVEL ADJ.
BRIGHTNESS
DC LEVEL REFERENCE
INPUT CONTROL
GAIN ADJ.
IC601
AN5371S
CHROMA OU
BRIGHT
B.ADJ
R.ADJ
COM ADJ

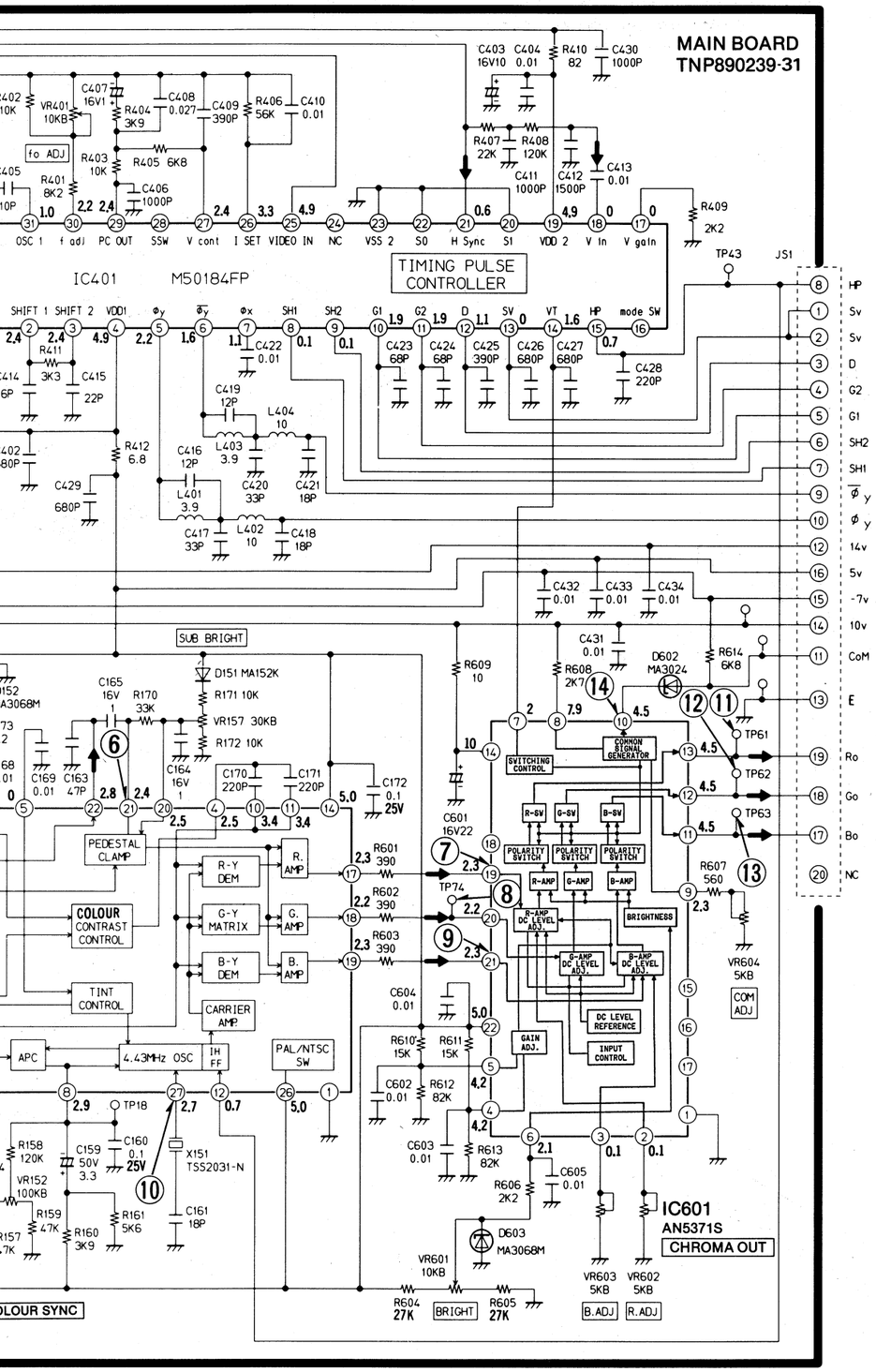
MAIN BOARD
TNP890239-31
IC401 M50184FP
TIMING PULSE CONTROLLER
PEDESTAL CLAMP
COLOUR CONTRAST CONTROL
TINT CONTROL
R-Y DEM
G-Y MATRIX
B-Y DEM
R. AMP
G. AMP
B. AMP
CARRIER AMP
APC
4.43MHz OSC
IH FF
PAL/NTSC SW
SUB BRIGHT
fo ADJ
SWITCHING CONTROL
COMMON SIGNAL GENERATOR
POLARITY SWITCH
R-AMP
G-AMP
B-AMP
R-AMP DC LEVEL ADJ.
G-AMP DC LEVEL ADJ.
B-AMP DC LEVEL ADJ.
BRIGHTNESS
DC LEVEL REFERENCE
INPUT CONTROL
GAIN ADJ.
IC601
AN5371S
CHROMA OUT
COLOUR SYNC
BRIGHT
B.ADJ
R.ADJ
COM ADJ
JS1
HP
Sv
D
G2
G1
SH2
SH1
Φy
14v
5v
-7v
10v
CoM
E
Ro
Go
Bo
NC

FORME D'ONDA

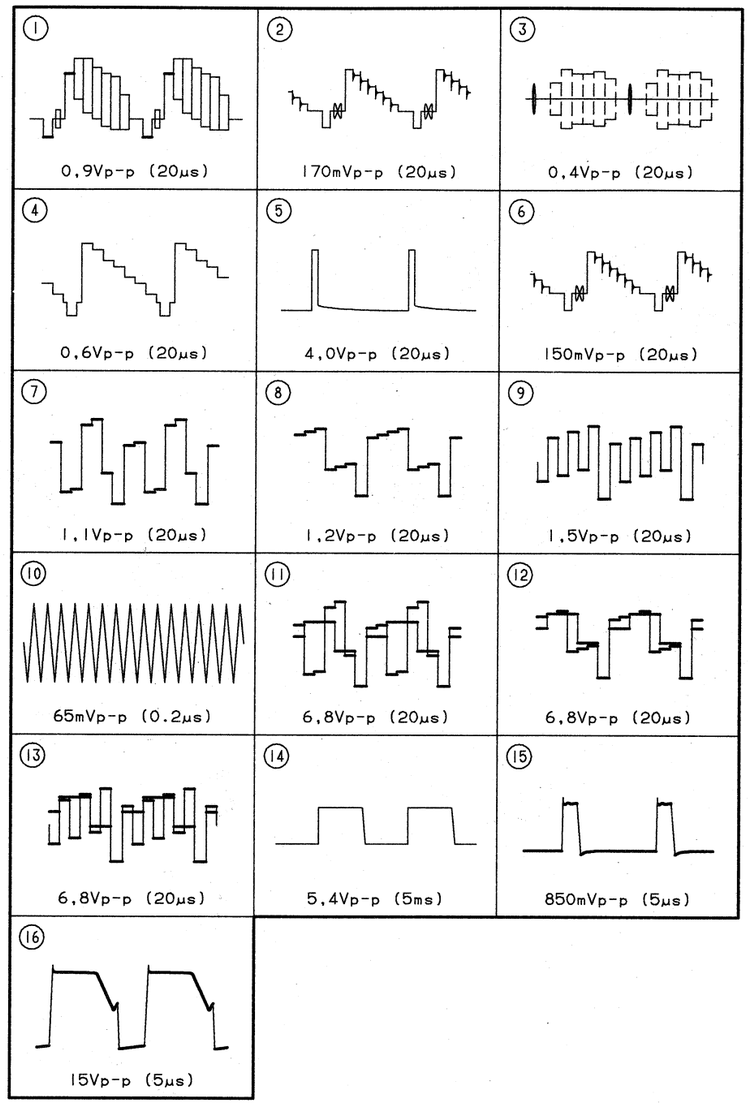
1
0,9Vp-p (20µs)
2
170mVp-p (20µs)
3
0,4Vp-p (20µs)
4
0,6Vp-p (20µs)
5
4,0Vp-p (20µs)
6
150mVp-p (20µs)
7
1,1Vp-p (20µs)
8
1,2Vp-p (20µs)
9
1,5Vp-p (20µs)
10
65mVp-p (0.2µs)
11
6,8Vp-p (20µs)
12
6,8Vp-p (20µs)
13
6,8Vp-p (20µs)
14
5,4Vp-p (5ms)
15
850mVp-p (5µs)
16
15Vp-p (5µs)

DISPOSIZIONE DELLE PARTI

Nota : Il numero sui pezzi meccanici indica il No. di riferimento dell'elenco dei pezzi di ricambio.

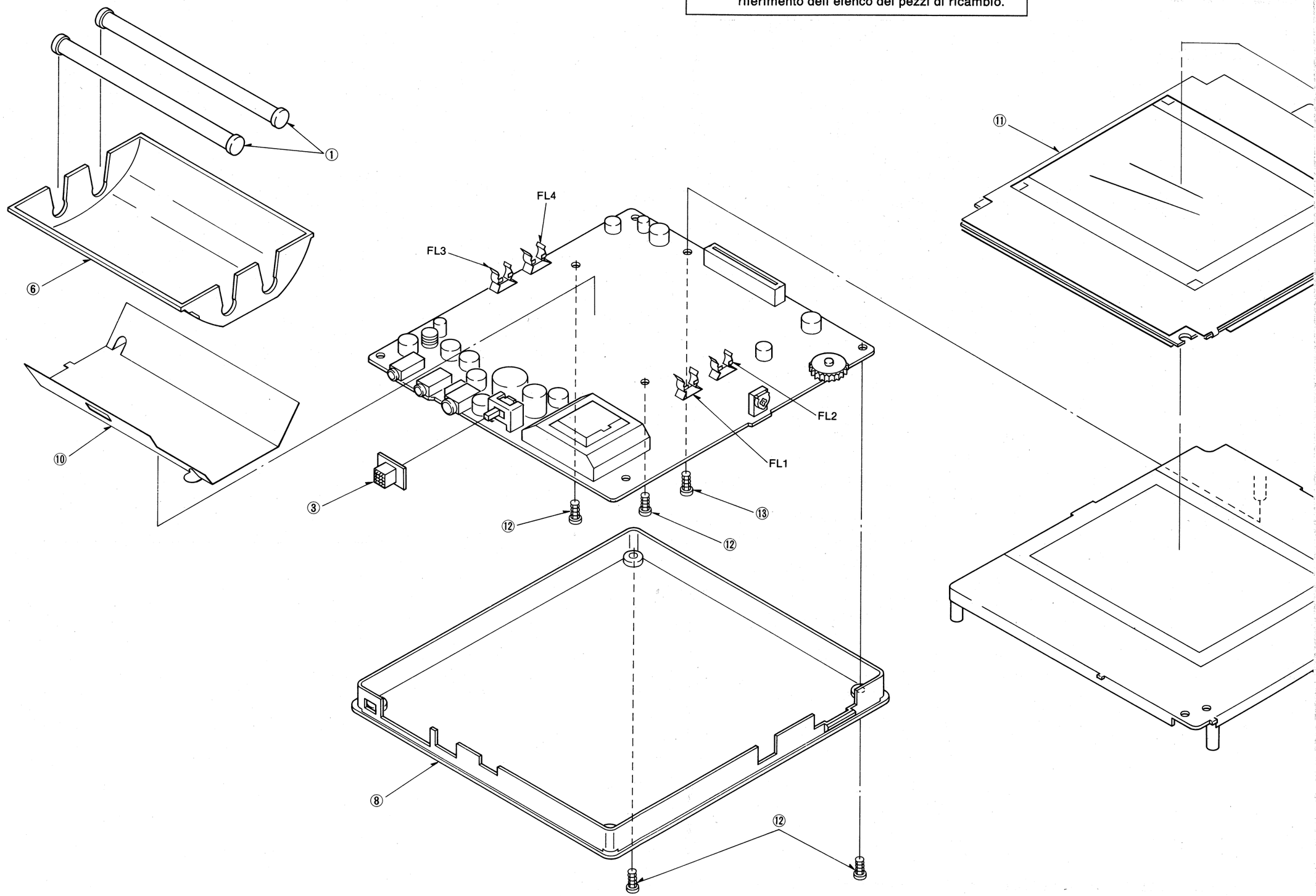

PARTI

ndica il No. di
di ricambio.

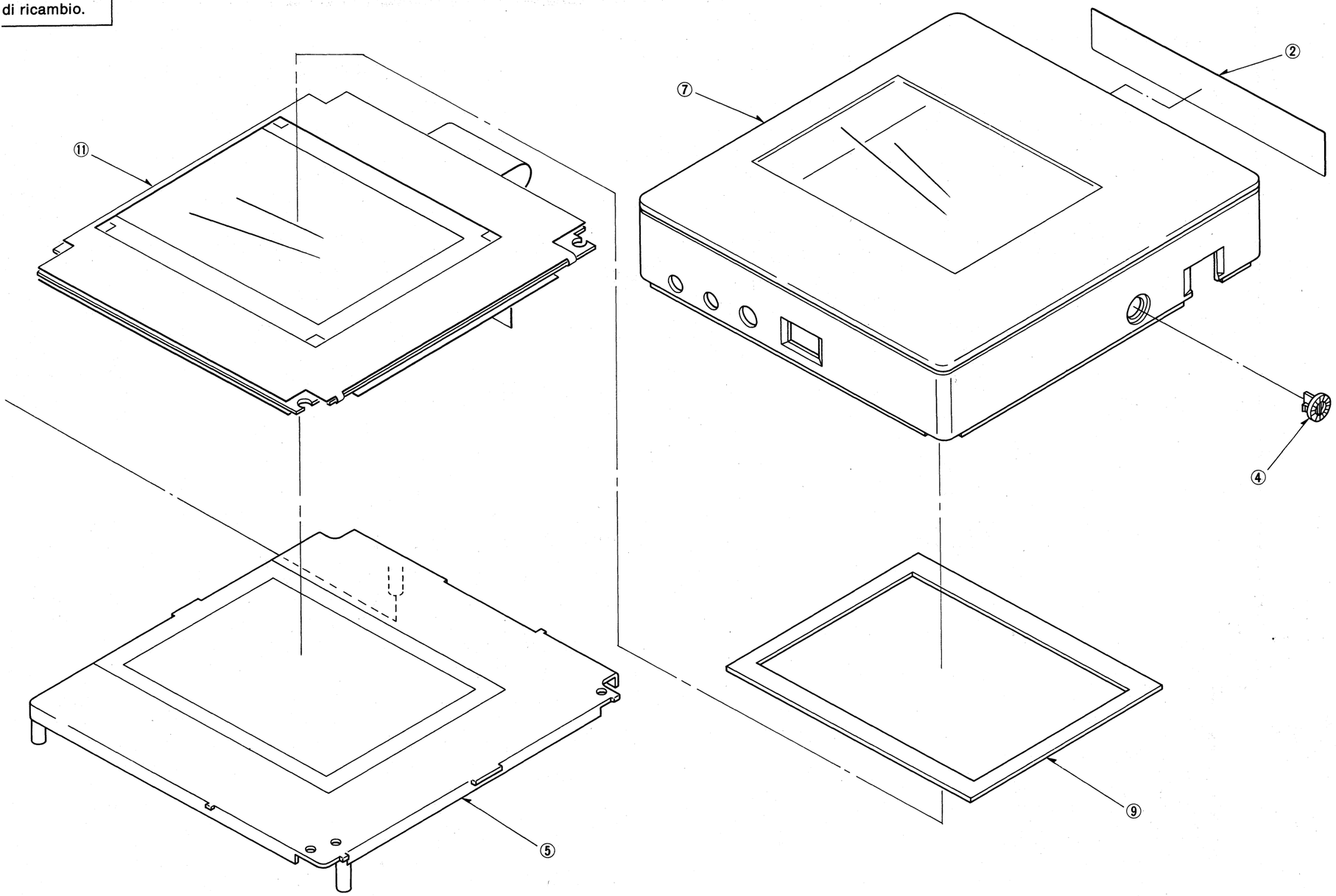

ELENCO PARTI DI RICAMBIO

Avvertenza Importante

I componenti identificati dal marchio ⚠ presentano speciali caratteristiche determinanti ai fini della sicurezza. Nel caso si debbano sostituire alcuni di questi componenti, dovranno quindi essere utilizzate solo parti consigliate dal costruttore.

Nota : Il gruppo scheda circuito stampato con il marchio "NLA" non è più disponibile dopo l'interruzione della produzione del corredo completo.

Abbreviazione della descrizione e numero

1. Resistore

Esempio :

ERD25TJ104 C 100KOHM, J, 1/4W

TIPO TOLLERANZA

TIPO	TOLLERANZA
C : Carbonio F : Fusibile M : Ossido Metallico Pellicola Metallico S : Solido W : Avvolgimento in filo	F : ±1% G : ±2% J : ±5% K : ±10% M : ±20%

2. Condensatore

Esempio :

ECKF1H103ZF C 0.01UF, Z, 50V

TIPO TOLLERANZA

TIPO	TOLLERANZA
C : Ceramico E : Elettrolitico P : Poliestere Polipropilene T : Tantalo	C : ±0.25pF D : ±0.5pF F : ±1pF J : ±5% K : ±10% L : ±15% M : ±20% P : +100%, −0% Z : +80%, −20%

Ref. No.	Part No.	Description
	MECHANICAL PARTS	
1	K-C72T5E3	FLUORESCENT LAMP
2	TBM870064	MODEL NAME PLATE
3	TBX85353101	POWER KNOB
4	TBX8552901	COLOUR KONB
	TJS1A4270	PHONO-to-BNC ADAPTOR
	TKK850833	SHOE ATTACHMENT
	TBX8590501	KNOB
	XUC4	E.RING
	TKK850834-1	TRIPOD ATTACHMENT
	TBX8590701	KNOB
5	TKK850840	SCATTERING PANEL
6	TKK859875	REFLECTION PLATE
	TKK870801	HOOD
	TKK870802	FITTING ATTACHMENT
	XSN3+6	SCREW
	XWG3	WASHER
	XWG3F10	WASHER
	TKK870803	HOOD BRACKET
7	TKY870301-1	CABINET (UPPER)
8	TKY870401	CABINET (BOTTOM)
9	TMM85553	PANEL SPACER
	TNQ80923	EARPHONE
	TNQ80929-1	BELT
	TPC8811101	CARTON
	TPG851401	PACKING CASE
	TQB620618	INSTRUCTION BOOK
	TQB620625	SPEC. SHEET
	TQE8560	BAG
	TQE8786	CARRYING BAG

Ref. No.	Part No.	Description
	TQF87294	LABEL
	TSX4984	AV CORD (PHONO PLUG)
	TSX4986	AV CORD (DIN PLUG)
10	TUC85314	SHIELD CASE
11	TXANL1MC3UD	LCD ASSEMBLY
	TXAPD1MC3U	CUSHION
12	XTN17+3JFZ	SCREW
13	XTN17+6JFZ	SCREW
	XZB6X17C03	POLY BAG
	XZB7X10C03	POLY BAG
	XZB7X23C04	POLY BAG
	XZB8X12C05	POLY BAG
	RESISTORS	
R131	ERJ6GMJ273	M 27KOHM, J, 1/10W
R132	ERJ6GMJ823	M 82KOHM, J, 1/10W
R133	ERJ6GMJ332	M 3.3KOHM, J, 1/10W
R134	ERJ6GMJ393	M 39KOHM, J, 1/10W
R135	ERJ6GMJ392	M 3.9KOHM, J, 1/10W
R136	ERJ6GMJ332	M 3.3KOHM, J, 1/10W
R137	ERJ6GMJ331	M 330OHM, J, 1/10W
R138	ERJ6GMJ563	M 56KOHM, J, 1/10W
R151	ERJ6GMJ101	M 100OHM, J, 1/10W
R152	ERJ6GMJ151	M 150OHM, J, 1/10W
R153	ERJ6GMJ272	M 2.7KOHM, J, 1/10W
R154	ERJ6GMJ105	M 1MOHM, J, 1/10W
R155	ERJ6GMJ123	M 12KOHM, J, 1/10W
R156	ERJ6GMJ824	M 820KOHM, J, 1/10W
R157	ERJ6GMJ473	M 47KOHM, J, 1/10W
R158	ERJ6GMJ124	M 120KOHM, J, 1/10W
R159	ERJ6GMJ473	M 47KOHM, J, 1/10W

Ref. No.	Part No.	Description
R160	ERJ6GMJ392	M 3.9KOHM, J, 1/10W
R161	ERJ6GMJ562	M 5.6KOHM, J, 1/10W
R162	ERJ6GMJ103	M 10KOHM, J, 1/10W
R163	ERJ6GMJ184	M 180KOHM, J, 1/10W
R164	ERJ6GMJ563	M 56KOHM, J, 1/10W
R165	ERJ6GMJ104	M 100KOHM, J, 1/10W
R166	ERJ6GMJ333	M 33KOHM, J, 1/10W
R167	ERJ6GMJ273	M 27KOHM, J, 1/10W
R170	ERJ6GMJ333	M 33KOHM, J, 1/10W
R171	ERJ6GMJ103	M 10KOHM, J, 1/10W
R172	ERJ6GMJ103	M 10KOHM, J, 1/10W
R173	ERJ6GMJ222	M 2.2KOHM, J, 1/10W
R401	ERJ6GMJ822	M 8.2KOHM, J, 1/10W
R402	ERJ6GMJ103	M 10KOHM, J, 1/10W
R403	ERJ6GMJ103	M 10KOHM, J, 1/10W
R404	ERJ6GMJ392	M 3.9KOHM, J, 1/10W
R405	ERJ6GMJ682	M 6.8KOHM, J, 1/10W
R406	ERJ6GMJ563	M 56KOHM, J, 1/10W
R407	ERJ6GMJ223	M 22KOHM, J, 1/10W
R408	ERJ6GMJ124	M 120KOHM, J, 1/10W
R409	ERJ6GMJ222	M 2.2KOHM, J, 1/10W
R410	ERJ6GMJ820	M 82OHM, J, 1/10W
R411	ERJ6GMJ332	M 3.3KOHM, J, 1/10W
R412	ERJ6GMJ6R8	M 6.8OHM, J, 1/10W
R500	ERJ6GMJ222	M 2.2KOHM, J, 1/10W
R501	ERJ6GM0R00	M 0OHM, J, 1/10W
R502	ERJ6GMJ220	M 22OHM, J, 1/10W
R503	ERJ3GEJ120	M 12OHM, J, 1/20W
R601	ERJ6GMJ391	M 390OHM, J, 1/10W
R602	ERJ6GMJ391	M 390OHM, J, 1/10W
R603	ERJ6GMJ391	M 390OHM, J, 1/10W
R604	ERJ6GMJ273	M 27KOHM, J, 1/10W
R605	ERJ6GMJ273	M 27KOHM, J, 1/10W
R606	ERJ6GMJ222	M 2.2KOHM, J, 1/10W
R607	ERJ6GMJ561	M 560OHM, J, 1/10W
R608	ERJ6GMJ272	M 2.7KOHM, J, 1/10W
R609	ERJ6GMJ100	M 10OHM, J, 1/10W
R610	ERJ6GMJ153	M 15KOHM, J, 1/10W
R611	ERJ6GMJ153	M 15KOHM, J, 1/10W
R612	ERJ6GMJ823	M 82KOHM, J, 1/10W
R613	ERJ6GMJ823	M 82KOHM, J, 1/10W
R614	ERJ6GMJ682	M 6.8KOHM, J, 1/10W
R701	UN11010	FUSE RESISTOR ⚠
R702	ERJ6GMJ184	M 180KOHM, J, 1/10W
R703	ERJ6GMJ394	M 390KOHM, J, 1/10W
R704	ERJ6GMJ333	M 33KOHM, J, 1/10W
R705	ERJ6GMJ334	M 330KOHM, J, 1/10W
R706	ERJ6GMJ101	M 100OHM, J, 1/10W
R707	ERJ6GMJ822	M 8.2KOHM, J, 1/10W
R708	ERJ6GMJ223	M 22KOHM, J, 1/10W
R709	ERJ6GMJ222	M 2.2KOHM, J, 1/10W
R710	ERJ6GMJ102	M 1KOHM, J, 1/10W
R711	ERJ6GMJ102	M 1KOHM, J, 1/10W
R721	ERJ6GMJ563	M 56KOHM, J, 1/10W
R722	ERJ6GMJ683	M 68KOHM, J, 1/10W
R801	UN11004	FUSE RESISTOR ⚠

Ref. No.	Part No.	Description
R802	ERJ6GMJ332	M 3.3KOHM, J, 1/10W
R803	ERJ6GMJ332	M 3.3KOHM, J, 1/10W
R804	ERJ8GC0R00	M 0OHM, 1/8W
VR151	EVM7NGA00B33	SUB CONTRAST 3KOHMB
VR152	EVM7NGA00B15	COLOUR SYNC. 100KOHMB
VR154	EVNDAAA00B54	COLOUR 50KOHMB
VR157	EVM7NGA00B34	SUB BRIGHT 30KOHMB
VR401	EVM7NGA00B14	fo ADJ. 10KOHMB
VR601	EVLB1AA01B14	BRIGHT 10KOHMB
VR602	EVM7NGA00B53	R-ADJ. 5KOHMB
VR603	EVM7NGA00B53	B-ADJ. 5KOHMB
VR604	EVM7NGA00B53	COM ADJ. 5KOHMB
VR701	EVM7NGA00B13	+B ADJ. 1KOHMB
VR702	EVM7NGA00B14	B OSC. ADJ. 10KOHMB
	CAPACITORS	
C131	ECEV1CAN100P	E 10UF, 16V
C132	ECUX1H101JC	C 100PF, J, 50V
C133	ECUX1H150JC	C 15PF, J, 50V
C134	ECST1EY474ZL	T 0.47UF, 25V
C151	ECEV1CA100R	E 10UF, 16V
C153	ECUX1H560JC	C 56PF, J, 50V
C154	ECUX1H390JC	C 39PF, J, 50V
C155	ECUX1E104ZF	C 0.1UF, Z, 25V
C156	ECUX1E104ZF	C 0.1UF, Z, 25V
C157	TAC48474P16V	C 0.47UF, 16V
C158	ECUX1H331JC	C 330PF, J, 50V
C159	ECEV1HA3R3R	E 3.3UF, 50V
C160	ECUX1E104ZF	C 0.1UF, Z, 25V
C161	ECUX1H180JC	C 18PF, J, 50V
C162	ECUX1E104ZF	C 0.1UF, Z, 25V
C163	ECUX1H470JC	C 47PF, J, 50V
C164	TAC48105P16V	C 1UF, 16V
C165	TAC48105P16V	C 1UF, 16V
C166	ECUX1H103ZFN	C 0.01UF, Z, 50V
C167	ECUX1H103ZFN	C 0.01UF, Z, 50V
C168	ECUX1H103ZFN	C 0.01UF, Z, 50V
C169	ECUX1H103ZFN	C 0.01UF, Z, 50V
C170	ECUX1H221JC	C 220PF, J, 50V
C171	ECUX1H221JC	C 220PF, J, 50V
C172	ECUX1E104ZF	C 0.1UF, Z, 25V
C401	ECEV0JA101P	E 100UF, 6.3V
C402	ECUX1H681JC	C 680PF, J, 50V
C403	ECEV1CA100R	E 10UF, 16V
C404	ECUX1H103ZFN	C 0.01UF, Z, 50V
C405	ECUX1H100DTN	C 10PF, D, 50V
C406	ECUX1H102KBN	C 1000PF, K, 50V
C407	ECST1CY105ZR	T 1.0UF, 16V
C408	ECUX1H273ZF	C 0.027UF, Z, 50V
C409	ECUX1H391JCN	C 390PF, J, 50V
C410	ECUX1H103ZFN	C 0.01UF, Z, 50V
C411	ECUX1H102KBN	C 1000PF, K, 50V
C412	ECUX1H152KBN	C 1500PF, K, 50V
C413	ECUX1H103ZFN	C 0.01UF, Z, 50V
C414	ECUX1H060CCN	C 6PF, 50V
C415	ECUX1H220JCN	C 22PF, J, 50V
C416	ECUX1H120JCN	C 12PF, J, 50V

Ref. No.	Part No.	Description
C417	ECUX1H330JCN	C 33PF, J, 50V
C418	ECUX1H180JCN	C 18PF, J, 50V
C419	ECUX1H120JCN	C 12PF, J, 50V
C420	ECUX1H330JCN	C 33PF, J, 50V
C421	ECUX1H180JCN	C 18PF, J, 50V
C422	ECUX1H103ZFN	C 0.01UF, Z, 50V
C423	ECUX1H680JCN	C 68PF, J, 50V
C424	ECUX1H680JCN	C 68PF, J, 50V
C425	ECUX1H391JCN	C 390PF, J, 50V
C426	ECUX1H681JC	C 680PF, J, 50V
C427	ECUX1H681JC	C 680PF, J, 50V
C428	ECUX1H221JCN	C 220PF, J, 50V
C429	ECUX1H681JC	C 680PF, J, 50V
C430	ECUX1H102KBN	C 1000PF, K, 50V
C431	ECUX1H103ZFN	C 0.01UF, Z, 50V
C432	ECUX1H103ZFN	C 0.01UF, Z, 50V
C433	ECUX1H103ZFN	C 0.01UF, Z, 50V
C434	ECUX1H103ZFN	C 0.01UF, Z, 50V
C501	ECUX1H103KBN	C 0.01UF, K, 50V
C502	ECUX1E104ZF	C 0.1UF, Z, 25V
C503	ECUX1H471KC	C 470PF, K, 50V
C504	ECEV0JA470P	E 47UF, 6.3V
C506	ECEV1HA010R	E 1UF, 50V
C507	ECEV1CA470P	E 47UF, 16V
C601	ECEV1CA220P	E 22UF, 16V
C602	ECUX1H103KBN	C 0.01UF, K, 50V
C603	ECUX1H103KBN	C 0.01UF, K, 50V
C604	ECUX1H103ZFN	C 0.01UF, Z, 50V
C605	ECUX1H103ZFN	C 0.01UF, Z, 50V
C701	ECUX1H103ZFN	C 0.01UF, Z, 50V
C702	ECEV1CA470P	E 47UF, 16V
C703	ECEV1CA470P	E 47UF, 16V
C704	ECUX1H473ZF	C 0.047UF, Z, 50V
C705	ECEV1CA100R	E 10UF, 16V
C706	ECUX1H473ZF	C 0.047UF, Z, 50V
C707	ECUX1H152JC9	C 1500PF, J, 50V
C708	ECUX1H102KBN	C 1000PF, K, 50V
C709	ECUX1H103KBN	C 0.01UF, K, 50V
C710	ECUX1H103KBN	C 0.01UF, K, 50V
C721	ECEV0JA101P	E 100UF, 6.3V
C722	ECEV0JA101P	E 100UF, 6.3V
C723	ECEV1CA470P	E 47UF, 16V
C724	ECEV1CA100R	E 10UF, 16V
C725	ECEV1CA100R	E 10UF, 16V
C801	ECEV1CA470P	E 47UF, 16V
C802	ECUX2A562KR9	C 5600PF, K, 100V
C803	TAC45330P2KV	CAPACITOR 33PF, 2KV
C804	TAC45330P2KV	CAPACITOR 33PF, 2KV
	COILS	
L151	ELJFA150KB	COIL TRANS.
L152	ELJFA120KB	COIL TRANS.
L401	ELJFA3R9MB	COIL TRANS.
L402	ELJFA100KB	COIL TRANS.
L403	ELJFA3R9MB	COIL TRANS.
L404	ELJFA100KB	COIL TRANS.
L721	ERJ8GC0R00	0 OHM JUMPER

Ref. No.	Part No.	Description
L722	ELC05D002	CHOKE COIL
L801	ELC08D059	CHOKE COIL
	TRANSFORMERS	
T701	ELL12R715	COIL TRANS. ⚠
T801	ETE19K61AF	TRANS.
	DIODES	
D151	MA152K	DIODE
D152	MA3068M	ZENER DIODE
D602	MA3024	ZENER DIODE
D603	MA3068M	ZENER DIODE
D701	MA701	DIODE
D702	MA152K	DIODE
D721	MA701	DIODE
D722	MA152K	DIODE
D723	MA152K	DIODE
D724	MA152K	DIODE
	INTEGRATED CIRCUITS	
IC151	AN5372S	LINEAR IC
IC401	M50184FP	IC
IC501	TVSNJM386MA1	LINEAR IC
IC601	AN5371S	LINEAR IC
IC701	FA7610N	IC
	TRANSISTORS	
Q131	2SD601A	TRANSISTOR
Q132	2SD601A	TRANSISTOR
Q133	2SD601A	TRANSISTOR
Q701	2SD1119	TRANSISTOR
Q801	2SD874A	TRANSISTOR
Q802	2SD874A	TRANSISTOR
	OTHERS	
CF151	TAFTPS443MC	CERAMIC FILTER
FL1	TJC85323	TERMINAL
FL2	TJC85323	TERMINAL
FL3	TJC85323	TERMINAL
FL4	TJC85323	TERMINAL
JS1	TJS8A8110	CONNECTOR
JS101	TJS8A8750	A/V JACK
JS501	TJS8A8750	EARPHONE JACK
JS701	TJS8A8021	DC SOCKET
NLA	TNP890239-31	MAIN BOARD
S701	TSE80349	POWER SWITCH
X151	TSS2031-N	CRYSTAL OSC.
	BATTERY CASE	
	TNQ80937	BATTERY CASE
	TES8339-1	SPRING B (-)
	TES8340-1	SPRING C (+)
	TES8341	SPRING A (+/-)
	TJC85318-1	BATTERY TERMINAL
	TKX890701	BRACKET
	TKY890906-1	COVER
	TQF87286-1	BATTERY LABEL
	TSX9151	DC POWER CORD
	TXAKX180931	BRACKET ASSEMBLY
	TXAKY280937	BODY ASSEMBLY
	XTN17+6JFZ	SCREW
NLA	TNP800457-11	CIRCUIT BOARD

TC-MC3U

Ref. No.	Part No.	Description
D751	MA711	DIODE
JS75	TJS8A8020-1	DC SOCKET
R751	UN11010	FUSE RESISTOR ⚠
R752	ERX12SJ1R2	RESISTOR 1.2OHM, 1/2W
SW75	TSE80935	SWITCH

Stampato in Giaappone
89020550 Ⓗ 0223

ORDER NO. ITD88111220C8

Service Manual

LCD Colour Monitor

TC-MC3U

3N52 chassis

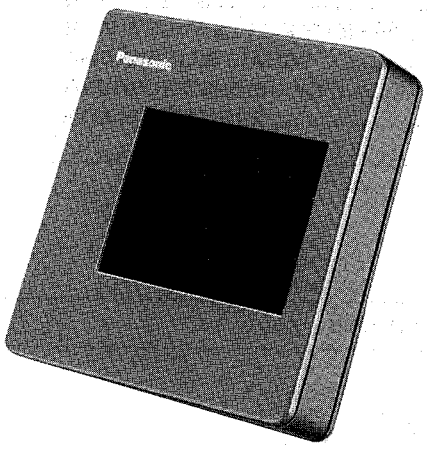

Specifications

Power Source :	9.5 V DC, 4-way operation (AC Adaptor / Car Adaptor Cord / Dry Cells / Rechargeable Battery)
Power Consumption :	AC Operation 5.5 W DC Operation 2.8 W DC Charge 7.0 W (Rechargeable Battery)
Television System :	PAL Systems
Video / Audio In Terminal :	Video 1.0 V p-p 75 Ω Impedance Audio 0.5 V rms 600 Ω Impedance
Earphone Impedance :	8 Ω
Viewing Area :	7.5 cm
Number of Pixels :	102672 (276 vertical x 372 horizontal)
Viewing Angle :	± 40° (horizontal) ± 30° (vertical)
Dimensions :	Height : 98 mm Width : 93 mm Depth : 24 mm
Mass (Weight) :	160 g
Included Accessories :	AV Connection Cord Adaptor Hood Hood Bracket Fitting Attachment Battery Case R6 size Battery (x 6) Belt Tripod Attachment Shoe Attachment Carrying Bag Earphone

Specifications are subject to change without notice.
Mass (Weight) and dimensions shown are approximate.

Technische Daten

Netzspannung :	9,5 V Gleichstrom, Vierwegbetrieb (Netzadapter / Autobatterieadapter / Trockenbatterien / Akkumulator)
Leistungsaufnahme :	Netzbetrieb 5,5 W Batteriebetrieb 2,8 W Ladebetrieb 7,0 W (Akkumulator)
Fernsehnormen :	PAL Systeme
Video / Audio Eingang Anschlüsse :	Video 1,0 V s-s 75 Ohm Impedanz Audio 0,5 V rms 600 Ohm Impedanz
Ohrhörerimpedanz :	8 Ohm
Displayfläche :	7,5 cm
Bildpunkte :	102672 (276 vertikal x 372 horizontal)
Betrachtungswinkel :	± 40° (horizontal) ± 30° (vertikal)
Abmessungen :	Höhe : 98 mm Breite : 93 mm Tiefe : 24 mm
Gewicht :	160 g
Mitgeliefertes Zubehör :	A/V Anschlußkabel Adapter Blendschutz Haubenhalterung Befestigungshalterung Batteriebehälter R6 Trockenbatterien (x 6) Halteriemen Stativhalterung Aufsteckschuhbefestigung Tragetasche Ohrhörer

Änderungen der technischen Daten vorbehalten.
Gewichte und Abmessungen sind Näherungsangaben.

Panasonic

Matsushita Electric Industrial Co., Ltd.
Central P. O. Box 288, Osaka 530-91, Japan

CONTENTS

INHALT

ADJUSTMENTS 2
3 ..... JUSTIERUNGEN
CONDUCTOR VIEWS ..... 4 ..... ANSICHT DER LEITERBAHNEN
SCHEMATIC DIAGRAMS ..... 6 ..... SCHALTBILD SCHEMA
PARTS LOCATION ..... 8 ..... EXPLOSIONSZEICHNUNG
REPLACEMENT PARTS LIST ..... 9 ..... ERSATZTEILLISTE

ADJUSTMENTS

ITEM / PREPARATION	ADJUSTMENT PROCEDURE
B VOLTAGE 1. Supply DC voltage : +9.5 V to JS702. 2. Apply Philips pattern. 3. Connect a DC voltmeter to cathode of D722.	1. Adjust VR701 to obtain 10.1 ± 0.01 V at cathode of D722.
COMMON VOLTAGE 1. Apply a black and white signal.	1. Adjust the Bright control (VR601) where the flicker is most noticeable point. 2. Adjust COM Adj. (VR604) so that no flicker occurs.
WHITE BALANCE 1. Apply a black and white signal. 2. Set Controls : Bright (VR601) ..... centre	1. Alternately adjust the VR602 and VR603 to produce a normal black and white picture. **Note :** Be sure to make the adjustment by using the built-in fluorescent tube. The adjustment might be incorrect if any other light source is used.
PICTURE POSITION 1. Apply Philips pattern.	1. Adjust fo Adj. (VR401) for best horizontal position.

ITEM / PREPARATION	ADJUSTMENT PROCEDURE	WAVEFORM
COLOUR OUTPUT LEVEL (GREEN) 1. Connect an Oscilloscope to pin-20 of IC601. 2. Apply a black and white signal.	1. Adjust Sub Bright control (VR157) to achieve a waveform shown in Fig. 1. 2. Connect the oscilloscope to pin-12 of IC601. 3. Adjust Sub Contrast control (VR151) to achieve a waveform shown in Fig. 2.	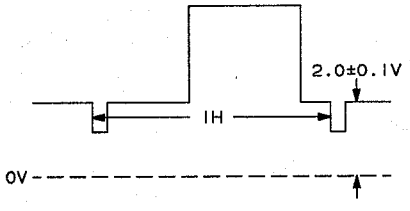 Fig. 1 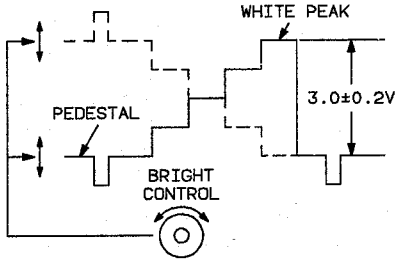 Fig. 2

JUSTIERUNGEN

ABGLEICHPUNKTE UND VORBEREITUNG	JUSTIERUNG
VERSORGUNGSSPANNUNG B 1. Gleichspannungsversorgung : +9,5V an JS702 2. Ein FUBK-Testbild empfangen. 3. DC-Voltmeter an die Katode von D722 anschliessen.	1. Mit VR701 an der Katode von D722 10,1 ± 0,01 Volt einstellen.
VERSORGUNGSSPANNUNG 1. Ein Schwarz-Weißsignal empfangen.	1. Helligkeitsreger VR601 so einstellen, daß im Bild ein "maximaler" Flimmereindruck ensteht. 2. Mit VR604 ein flimmerfreies Bild einstellen.
WEISSABGLEICH 1. Ein Schwarz-Weißsignal empfangen. 2. Die Regler wie folgt einstellen Helligkeit (VR601) ..... Mittenstellung	1. Mit VR602 und VR603 ein normales Schwarz-Weissbild einstellen. **Anmerkung :** Abgleich nur mit eingebauter Leuchtstofflampe vornehmen. Die Verwendung anderer Lichtquellen führt zu einem Fehlabgleich in diesem Bereich.
BILDLAGE 1. Ein FUBK-Testbild empfangen.	1. Mit VR401 beste horizontale Bildlage einstellen.

ABGLEICHPUNKTE UND VORBEREITUNG	JUSTIERUNG	SIGNALFORM
FARBAUSGANGSPEGEL (GRÜN) 1. Oszilloskop an Stift-20 / IC601 anklemmen. 2. Ein Schwarz-Weißsignal empfangen. (Oszillogramm siehe Abb. 1)	1. Helligkeitsvorregler VR157 auf die erforderliche Wellenform in Abb. 1 einstellen. 2. Oszilloskop an Stift-12 / IC601 anklemmen. 3. Kontrastvorregler VR151 auf die erforderliche Wellenform in Abb. 2 einstellen.	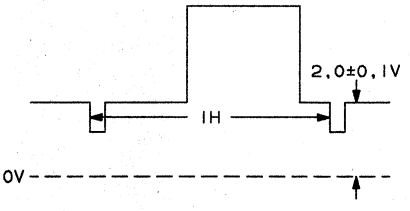 **Abb. 1** 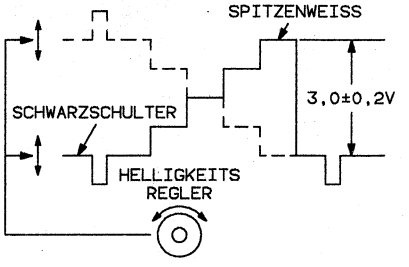 **Abb. 2**

CONDUCTOR VIEWS

ANSICHT DER LEITERBAHNEN

MAIN BOARD TNP890239-31

HAUPTPLATINE TNP890239-31

I.C.	IC401

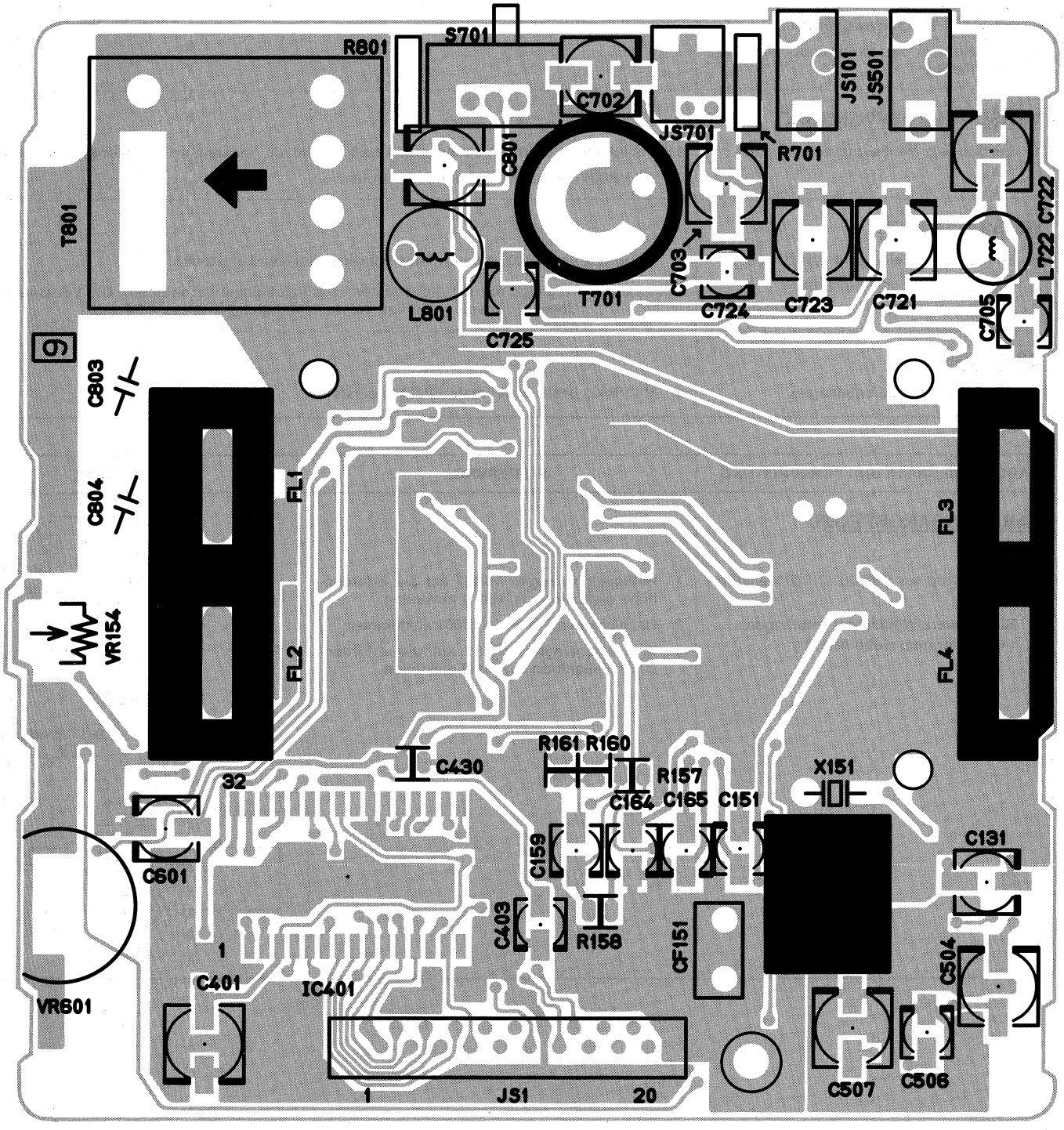

MAIN BOARD TNP890239-31 HAUPTPLATINE TNP890239-31

I.C.	IC701 IC151 IC601 IC501
TRANSISTOR	Q701 Q802 Q801 Q132 Q131 Q133
DIODE	D701 D702 D721 D724 D723 D602 D151 D722 D152 D603

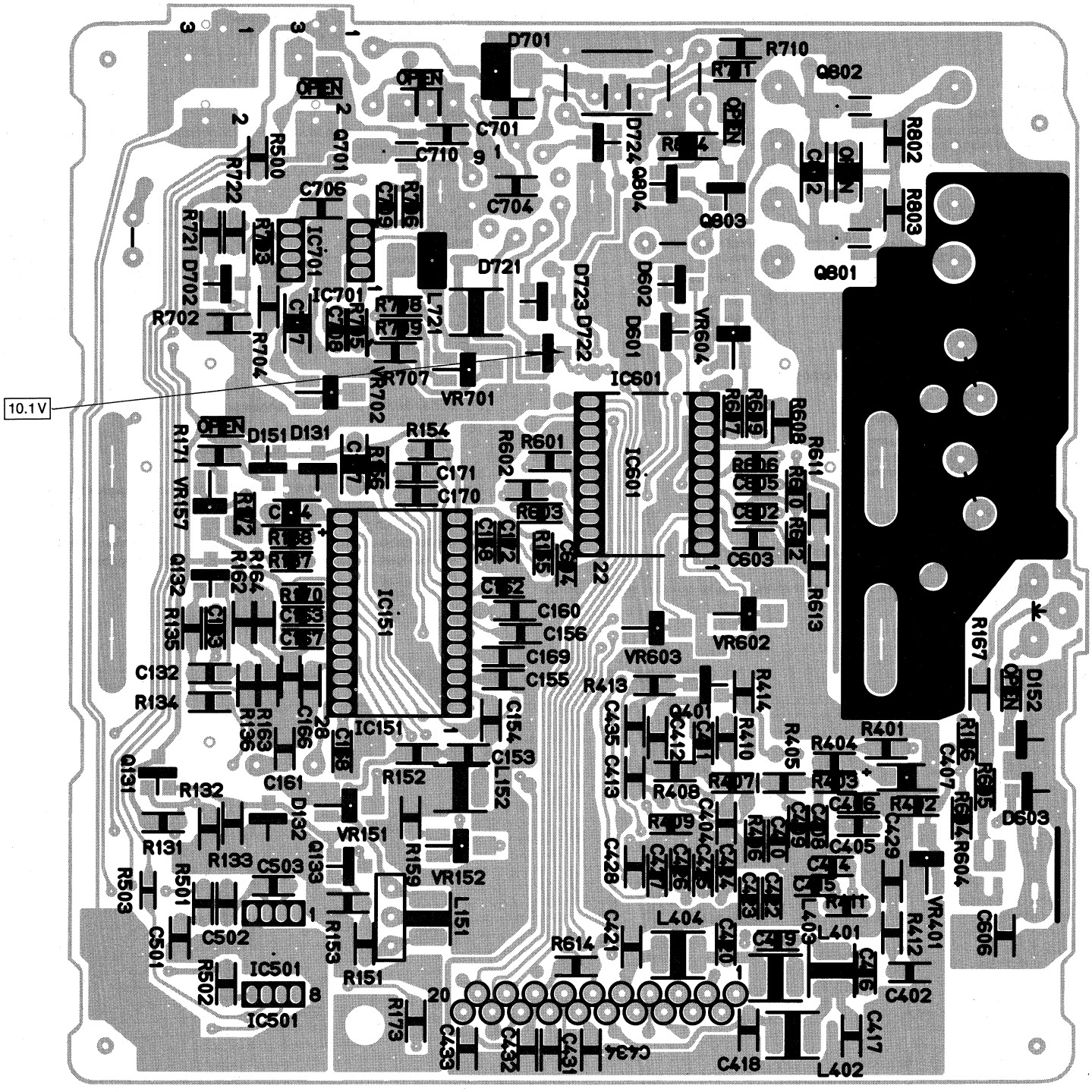

SCHEMATIC DIAGRAM FOR MODEL TC - MC3U (3N52 chassis)

ZEICHENERKLÄRUNG FÜR MODELL TC - MC3U (3N52 Chassis)

Important Safety Notice

Components identified by ⚠ mark have special characteristics important for safety. When replacing any of these components, use only manufacturer's specified parts.

Wichtiger Sicherheitshinweis

Teile, die mit einem Hinweis ⚠ gekennzeichnet sind, sind wichtig für die Sicherheit. Sollte ein Auswechseln erforderlich sein, sind unbedingt Originalteile einzusetzen.

NOTES :

1. RESISTOR
   All resistors are 1/10W resistor, unless marked as follows :
   Unit of resistance is OHM [Ω] (K = 1,000 , M = 1,000,000).
   - ○ : Nonflammable
   - △ : Solid
   - ▨ : Wire Wound
   - ⊠ : Metal Oxide
   - ◎ : Metal Film
   - ⊗ : Fuse
2. CAPACITOR
   All capacitors are ceramic 50V capacitor, unless marked as follows :
   Unit of capacitance is μF, unless otherwise noted.
   - ⊗ : Temperature Compensation
   - Ⓜ : Polyester
   - ⓜ : Metalized Polyester
   - ⊠ : Polypropylene
   - +‖− : Electrolytic
   - NP‖ : Bipolar
   - Ⓣ : Dipped Tantalum
   - Ⓩ : Z - Type
3. COIL
   Unit of inductance is μH, unless otherwise noted.
4. TEST POINT
   - ⚲ : Test Point position
5. VOLTAGE MEASUREMENT
   Voltage is measured by a DC voltmeter.
   Conditions of the measurement are the following :
   - Power Source ..... DC 9.5 V
   - Applied Signal ..... Colour Bar signal
   - All customer's controls ..... Maximum position
6. Number in red circle indicates waveform number.
   (See waveform pattern table.)
7. This schematic diagram is the latest at the time of printing and subject to change without notice.

ANMERKUNG :

1. WIDERSTÄNDE
   Alle 1/10 Watt Widerstände sind Metallwiderstände, Abweichungen sind wie folgt gekennzeichnet.
   Die Maßeinheit ist Ohm [Ω] (K = 1.000, M = 1.000.000).
   - ○ : nicht brennbar
   - △ : Last
   - ▨ : Draht
   - ⊠ : Metall Oxyd
   - ◎ : Metall Film
   - ⊗ : Sicherung
2. KONDENSATOREN
   Alle Kondensatoren sind Keramikausführungen. Spannungsfestigkeit 50V, Abweichungen sind wie folgt gekennzeichnet. Die Maßeinheit ist μF, wenn keine anderen Bezeichnungen genannt sind.
   - ⊗ : Temperatur Kompensation
   - Ⓜ : Polyester
   - ⓜ : metallisches Polyester
   - ⊠ : Polypropylen
   - +‖− : Elektrolyt
   - NP‖ : Bipolar
   - Ⓣ : Tantal
   - Ⓩ : Z - Typ
3. SPULEN
   Die Maßeinheit ist μH, Abweichungen sind gekennzeichnet.
4. TESTPUNKTE
   - ⚲ : Kennzeichnung der Testpunktposition
5. SPANNUNGSMESSUNG
   Spannungsmessungen sind mit einem DC - Voltmeter durchzuführen.
   Die Meßbedingungen sind folgende :
   - Netzspannung ..... 9,5 V Gleichstrom
   - Wiedergabe Signal ..... Farbbalken-Testbild
   - Alle übrigen Einstellungen für Benutzer ..... Sollangaben
6. Rot eingerreiste nummern kennzeichnen Oszillogramm.
   (Siehe Signaltabelle)
7. Änderungen im Laufe der Fertigung sind möglich.

PIN CONNECTION **Stecker - Verbindungen**

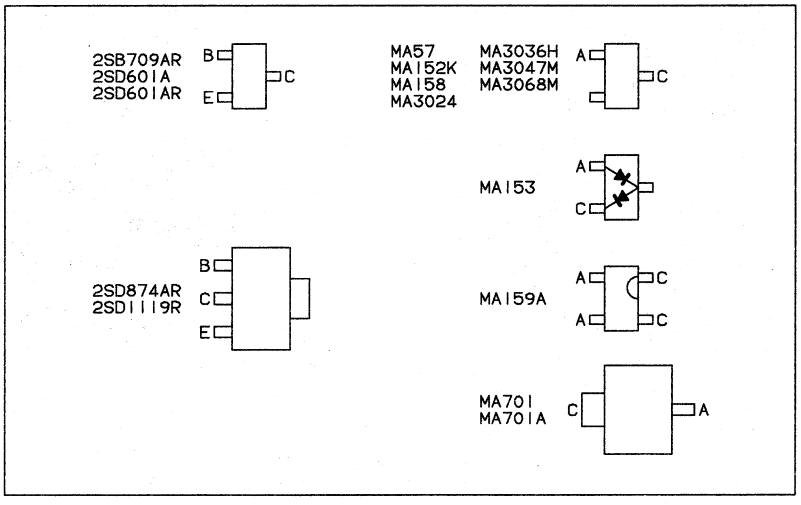

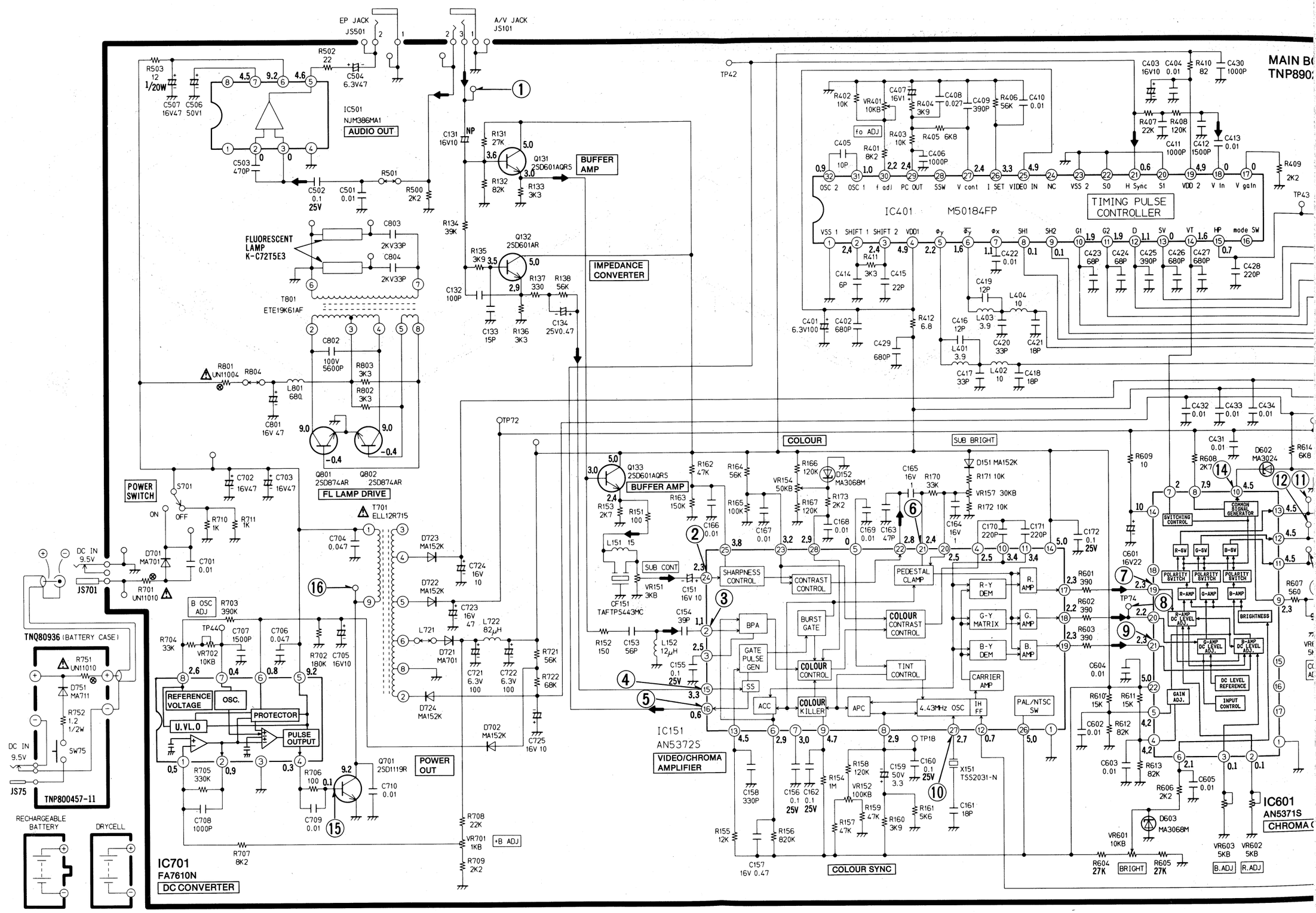

MAIN BO
TNP890
EP JACK
JS501
A/V JACK
JS101
IC501
NJM386MA1
AUDIO OUT
BUFFER AMP
IMPEDANCE CONVERTER
FLUORESCENT LAMP K-C72T5E3
T801
ETE19K61AF
Q801
2SD874AR
Q802
2SD874AR
FL LAMP DRIVE
POWER SWITCH
T701
ELL12R715
POWER OUT
Q701
2SD1119R
IC701
FA7610N
DC CONVERTER
REFERENCE VOLTAGE
OSC.
PROTECTOR
U.VL.O
PULSE OUTPUT
TNQ80936 (BATTERY CASE)
TNP800457-11
RECHARGEABLE BATTERY
DRYCELL
IC401
M50184FP
TIMING PULSE CONTROLLER
COLOUR
SUB BRIGHT
SUB CONT
SHARPNESS CONTROL
CONTRAST CONTROL
PEDESTAL CLAMP
BURST GATE
COLOUR CONTRAST CONTROL
COLOUR CONTROL
TINT CONTROL
COLOUR KILLER
4.43MHz OSC
PAL/NTSC SW
CARRIER AMP
IC151
AN5372S
VIDEO/CHROMA AMPLIFIER
COLOUR SYNC
IC601
AN5371S
CHROMA
SWITCHING CONTROL
COMMON SIGNAL GENERATOR
POLARITY SWITCH
BRIGHTNESS
DC LEVEL REFERENCE
INPUT CONTROL
GAIN ADJ.
BRIGHT
B.ADJ
R.ADJ

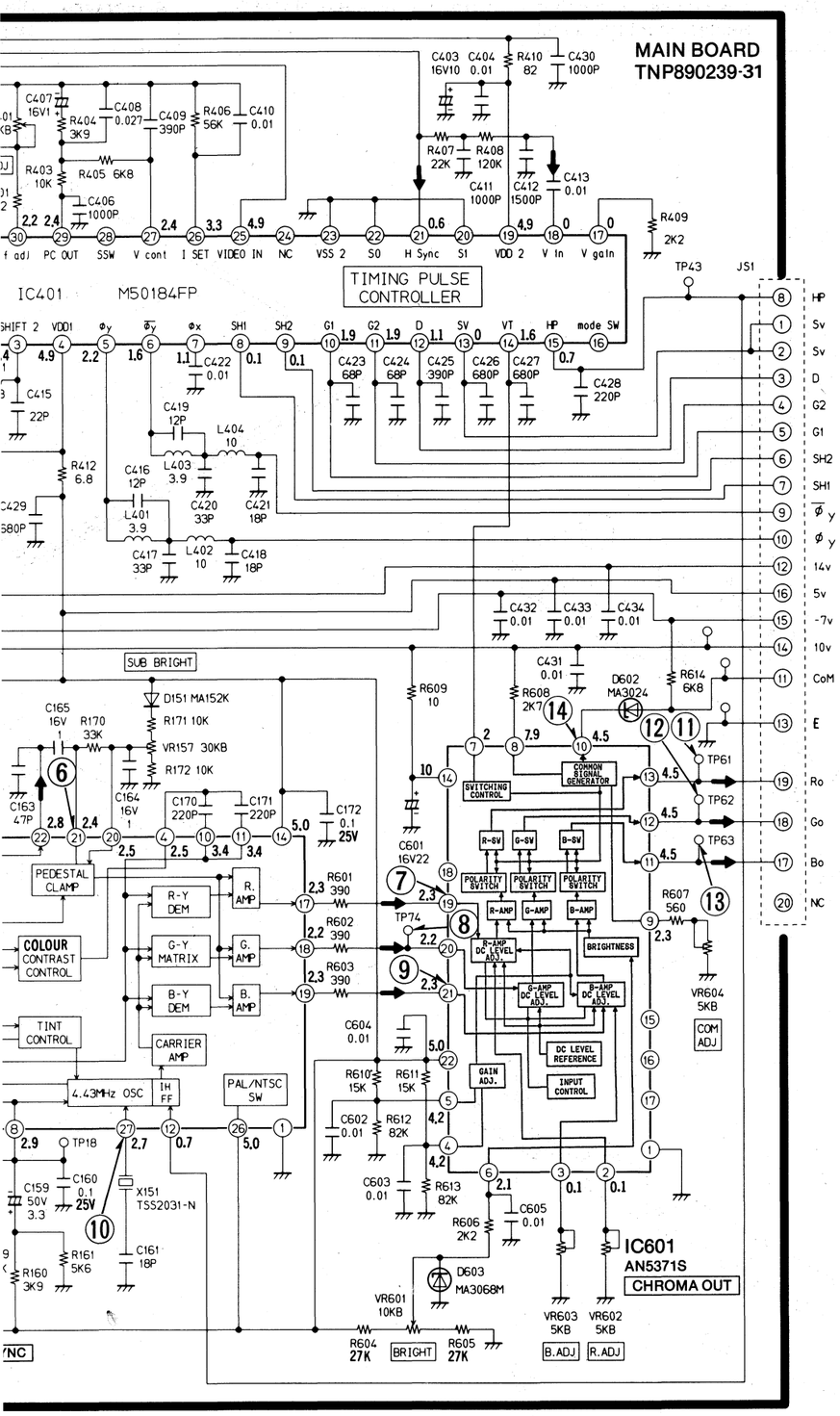

WAVEFORM PATTERN TABLE
SIGNALTABELLE

① 0.9Vp-p (20μs)	② 170mVp-p (20μs)	③ 0.4Vp-p (20μs)
④ 0.6Vp-p (20μs)	⑤ 4.0Vp-p (20μs)	⑥ 150mVp-p (20μs)
⑦ 1.1Vp-p (20μs)	⑧ 1.2Vp-p (20μs)	⑨ 1.5Vp-p (20μs)
⑩ 65mVp-p (0.2μs)	⑪ 6.8Vp-p (20μs)	⑫ 6.8Vp-p (20μs)
⑬ 6.8Vp-p (20μs)	⑭ 5.4Vp-p (5ms)	⑮ 850mVp-p (5μs)
⑯ 15Vp-p (5μs)		

PARTS LOCATION

Note : The number on mechanical parts indicates Ref. No. of Replacement Parts List.

EXPLOSI

Anmerkung : Die Num
zeigt die

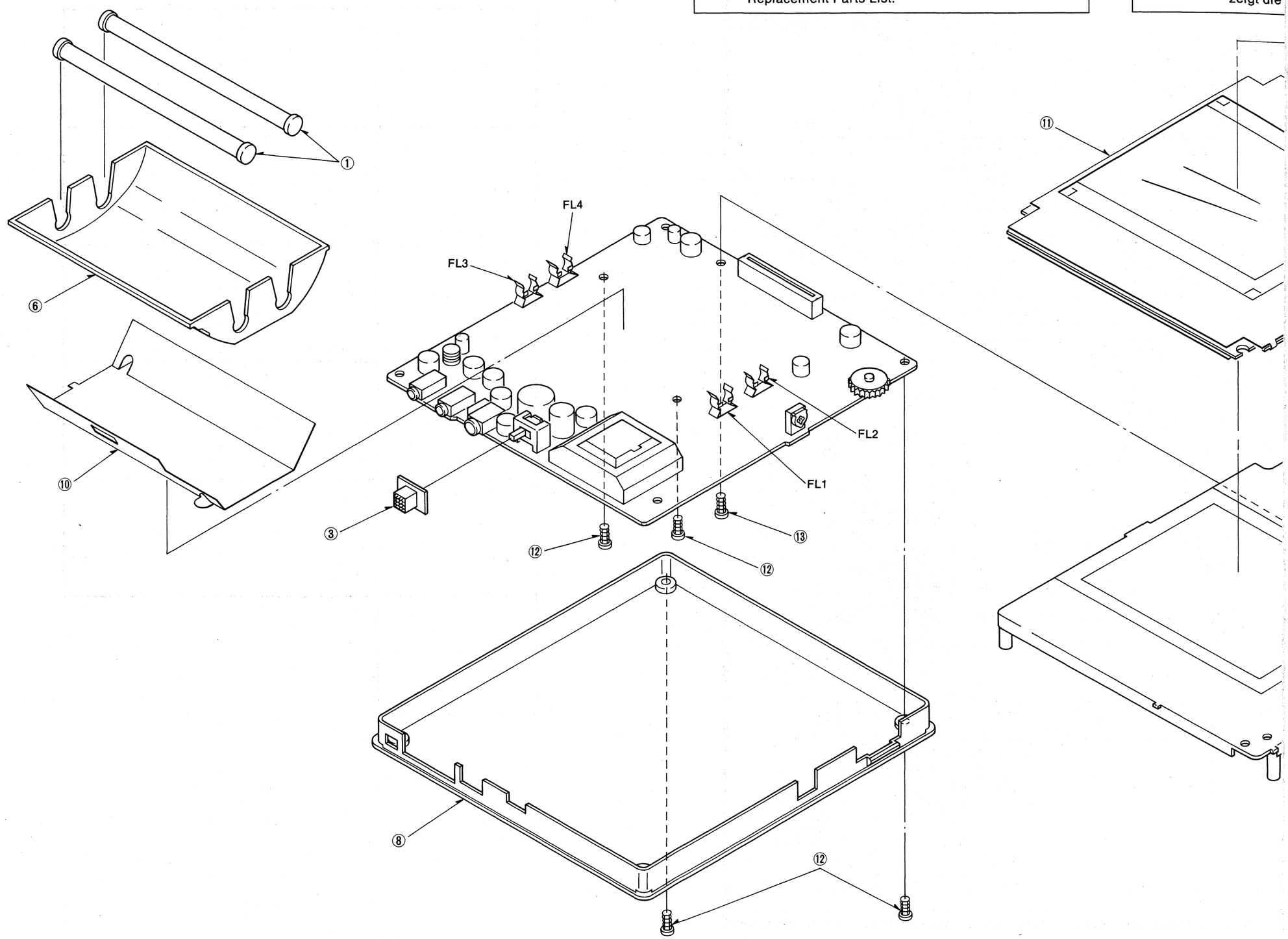

EXPLOSIONSZEICHNUNG

. No. of

Anmerkung : Die Nummer auf den mechanischen Teilen zeigt die Bezugsnummer der Ersatzteilliste an.

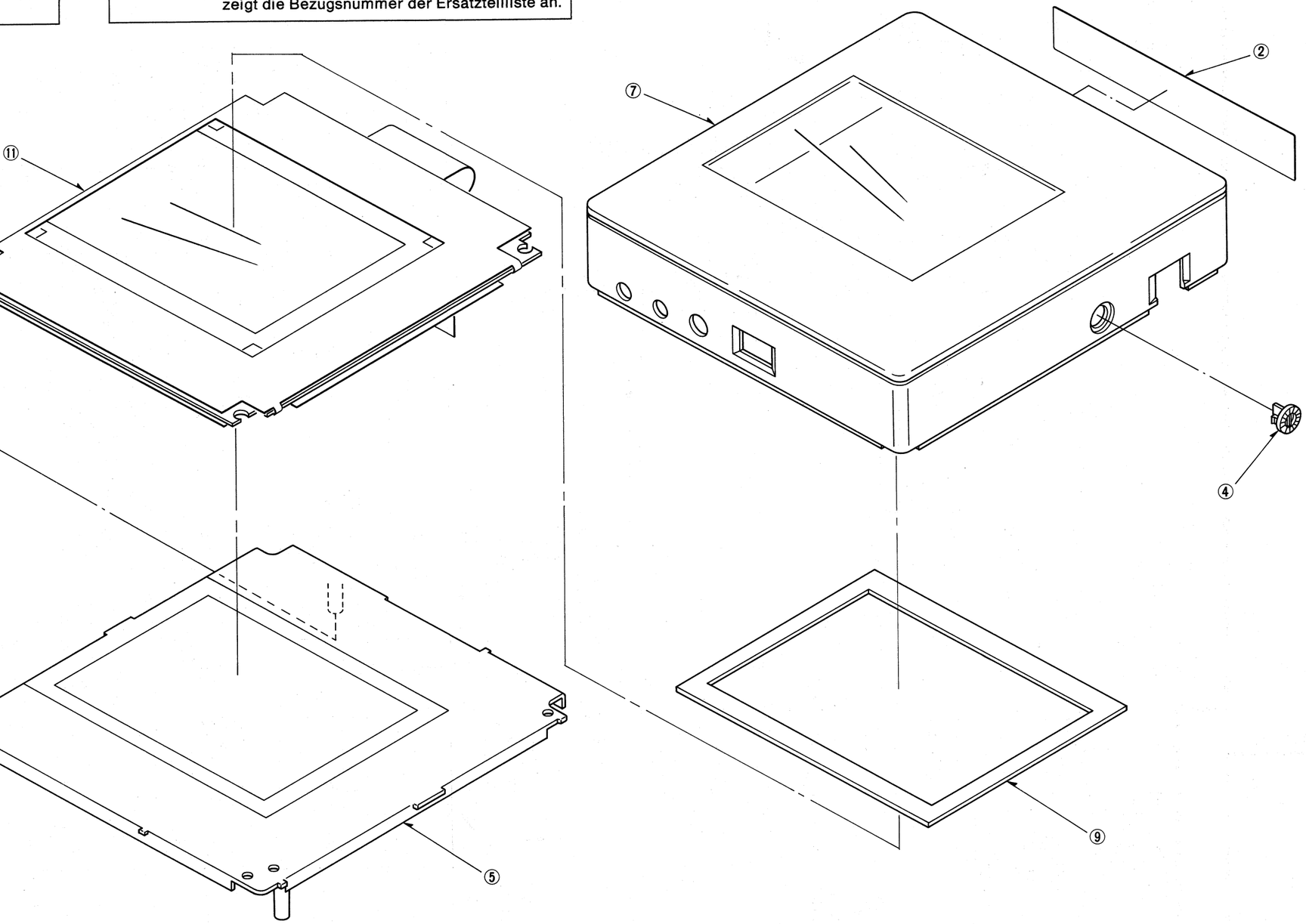

REPLACEMENT PARTS LIST

Important Safety Notice

Components identified by ⚠ mark have special characteristics important for safety. When replacing any of these components, use only manufacturer's specified parts.

Note : Printed circuit board assembly with mark "NLA" is no longer available after production discontinuation of the complete set.

Abbreviation of Part Name and Description

1. Resistor

Example :

ERD25TJ104 C 100KOHM, J, 1/4W

TYPE ALLOWANCE

TYPE	ALLOWANCE
C : Carbon	F : ± 1%
F : Fuse	G : ± 2%
M : Metal Oxide Metal Film	J : ± 5%
	K : ± 10%
S : Solid	M : ± 20%
W : Wire Wound	

2. Capacitor

Example :

ECKF1H103ZF C 0.01PF, Z, 50V

TYPE ALLOWANCE

TYPE	ALLOWANCE
C : Ceramic	C : ± 0.25pF
E : Electrolytic	D : ± 0.5pF
P : Polyester Polypropylene	F : ± 1pF
	J : ± 5%
T : Tantalum	K : ± 10%
	L : ± 15%
	M : ± 20%
	P : + 100%, − 0%
	Z : + 80%, − 20%

ERSATZTEILLISTE

Wichtiger Sicherheitshinweis

Teile, die mit einem Hinweis ⚠ gekennzeichnet sind, sind wichtig für die Sicherheit. Sollte ein Auswechseln erforderlich sein, sind unbedingt Originalteile einzusetzen.

Anmerkung : Platinen mit dem Hinweis "NLA" sind nach Beendigung der Produktion des kompletten Gerätes nicht mehr lieferbar.

Abkürzungen für die Ersatzteilbezeichnungen und Beschreibung.

1. Widerstand

Beispiel :

ERD25TJ104 C 100KOHM, J, 1/4W

MATERIAL TOLERANZ

MATERIAL	TOLERANZ
C : Kohle	F : ± 1%
F : Sicherung	G : ± 2%
M : Metall Oxyd Metall Schicht	J : ± 5%
	K : ± 10%
S : Last	M : ± 20%
W : Drahte	

2. Kondensatoren

Beispiel :

ECKF1H103ZF C 0.01PF, Z, 50V

MATERIAL TOLERANZ

MATERIAL	TOLERANZ
C : Keramik	C : ± 0.25pF
E : Elektrolyt	D : ± 0.5pF
P : Polyester Polypropylen	F : ± 1pF
	J : ± 5%
T : Tantal	K : ± 10%
	L : ± 15%
	M : ± 20%
	P : + 100%, − 0%
	Z : + 80%, − 20%

Ref. No.	Part No.	Description
	MECHANICAL PARTS	
1	K-C72T5E3	FLUORESCENT LAMP
2	TBM870064	MODEL NAME PLATE
3	TBX85353101	POWER KNOB
4	TBX8552901	COLOUR KNOB
	TJS1A4270	PHONO-to-BNC ADAPTOR
	TJS8A4400	CONNECTOR (PHONO-PHONO)
	TKK850833	SHOE ATTACHMENT
	TBX8590501	KNOB
	XUC4	E.RING
	TKK850834-1	TRIPOD ATTACHMENT
	TBX8590701	KNOB
5	TKK850840	SCATTERING PANEL
6	TKK859875	REFLECTION PLATE
	TKK870801	HOOD
	TKK870802	FITTING ATTACHMENT
	XSN3+6	SCREW
	XWG3	WASHER
	XWG3F10	WASHER
	TKK870803	HOOD BRACKET
7	TKY870301-1	CABINET (UPPER)
8	TKY870401	CABINET (BOTTOM)
9	TMM85553	PANEL SPACER
	TNQ80923	EARPHONE
	TNQ80929-1	BELT
	TPC8811101	CARTON
	TPG851371	PACKING CASE (for W.GERMANY)
	TPG851381	PACKING CASE (for EUROPE)
	TPG851391	PACKING CASE (for U.K.)
	TPG851421	PACKING CASE (for S.E.ASIA)
	TPG851431	PACKING CASE (for HONG KONG)
	TPG851441	PACKING CASE (for NEW ZEALAND)
	TQB620606	INSTRUCTION BOOK (for W.GERMANY)
	TQB620618	INSTRUCTION BOOK [ENGLISH/ITALIAN]
	TQB620606	INSTRUCTION BOOK [GERMAN]
	TQB620619	INSTRUCTION BOOK [FRENCH/DUTCH]
	TQB620620	INSTRUCTION BOOK [SWEDISH/SPANISH] (for EUROPE)
	TQB620617	INSTRUCTION BOOK (for U.K.)
	TQB620621	INSTRUCTION BOOK (for S.E.ASIA) (for HONG KONG) (for NEW ZEALAND)
	TQD62996	SERVICE CENTER LIST
	TQD6718078	WARRNTY CARD (for W.GERMANY)
	TQD6718080	WARRNTY CARD (for U.K.)
	TQD6718083	WARRNTY CARD (for HONG KONG)

Ref. No.	Part No.	Description
	TQE8786	CARRYING BAG
	TQF87288	LABEL (for W.GERMANY)
	TQF87289	LABEL (for EUROPE)
	TQF87290	LABEL (for U.K.)
	TQF87292	LABEL (for S.E.ASIA)
	TQF87293	LABEL (for HONG KONG)
	TQF87287	LABEL (for NEW ZEALAND)
	TSX4984	AV CORD (PHONO PLUG)
	TSX4985	AV CORD (PHONO SOCKET)
	TSX4986	AV CORD (DIN PLUG)
10	TUC85314	SHIELD CASE
11	TXANL1MC3UD	LCD ASSEMBLY
	TXAPD1MC3U	CUSHION
12	XTN17+3JFZ	SCREW
13	XTN17+6JFZ	SCREW
	RESISTORS	
R131	ERJ6GMJ273	M 27KOHM, J, 1/10W
R132	ERJ6GMJ823	M 82KOHM, J, 1/10W
R133	ERJ6GMJ332	M 3.3KOHM, J, 1/10W
R134	ERJ6GMJ393	M 39KOHM, J, 1/10W
R135	ERJ6GMJ392	M 3.9KOHM, J, 1/10W
R136	ERJ6GMJ332	M 3.3KOHM, J, 1/10W
R137	ERJ6GMJ331	M 330OHM, J, 1/10W
R138	ERJ6GMJ563	M 56KOHM, J, 1/10W
R151	ERJ6GMJ101	M 100OHM, J, 1/10W
R152	ERJ6GMJ151	M 150OHM, J, 1/10W
R153	ERJ6GMJ272	M 2.7KOHM, J, 1/10W
R154	ERJ6GMJ105	M 1MOHM, J, 1/10W
R155	ERJ6GMJ123	M 12KOHM, J, 1/10W
R156	ERJ6GMJ824	M 820KOHM, J, 1/10W
R157	ERJ6GMJ473	M 47KOHM, J, 1/10W
R158	ERJ6GMJ124	M 120KOHM, J, 1/10W
R159	ERJ6GMJ473	M 47KOHM, J, 1/10W
R160	ERJ6GMJ392	M 3.9KOHM, J, 1/10W
R161	ERJ6GMJ562	M 5.6KOHM, J, 1/10W
R162	ERJ6GMJ473	M 47KOHM, J, 1/10W
R163	ERJ6GMJ154	M 150KOHM, J, 1/10W
R164	ERJ6GMJ563	M 56KOHM, J, 1/10W
R165	ERJ6GMJ104	M 100KOHM, J, 1/10W
R166	ERJ6GMJ124	M 120KOHM, J, 1/10W
R167	ERJ6GMJ124	M 120KOHM, J, 1/10W
R170	ERJ6GMJ333	M 33KOHM, J, 1/10W
R171	ERJ6GMJ103	M 10KOHM, J, 1/10W
R172	ERJ6GMJ103	M 10KOHM, J, 1/10W
R173	ERJ6GMJ222	M 2.2KOHM, J, 1/10W
R401	ERJ6GMJ822	M 8.2KOHM, J, 1/10W
R402	ERJ6GMJ103	M 10KOHM, J, 1/10W
R403	ERJ6GMJ103	M 10KOHM, J, 1/10W
R404	ERJ6GMJ392	M 3.9KOHM, J, 1/10W
R405	ERJ6GMJ682	M 6.8KOHM, J, 1/10W
R406	ERJ6GMJ563	M 56KOHM, J, 1/10W
R407	ERJ6GMJ223	M 22KOHM, J, 1/10W

Ref. No.	Part No.	Description
R408	ERJ6GMJ124	M 120KOHM, J, 1/10W
R409	ERJ6GMJ222	M 2.2KOHM, J, 1/10W
R410	ERJ6GMJ820	M 82OHM, J, 1/10W
R411	ERJ6GMJ332	M 3.3KOHM, J, 1/10W
R412	ERJ6GMJ6R8	M 6.8OHM, J, 1/10W
R500	ERJ6GMJ222	M 2.2KOHM, J, 1/10W
R501	ERJ6GM0R00	M 0OHM, J, 1/10W
R502	ERJ6GMJ220	M 22OHM, J, 1/10W
R503	ERJ3GEJ120	M 12OHM, J, 1/20W
R601	ERJ6GMJ391	M 390OHM, J, 1/10W
R602	ERJ6GMJ391	M 390OHM, J, 1/10W
R603	ERJ6GMJ391	M 390OHM, J, 1/10W
R604	ERJ6GMJ273	M 27KOHM, J, 1/10W
R605	ERJ6GMJ273	M 27KOHM, J, 1/10W
R606	ERJ6GMJ222	M 2.2KOHM, J, 1/10W
R607	ERJ6GMJ561	M 560OHM, J, 1/10W
R608	ERJ6GMJ272	M 2.7KOHM, J, 1/10W
R609	ERJ6GMJ100	M 10OHM, J, 1/10W
R610	ERJ6GMJ153	M 15KOHM, J, 1/10W
R611	ERJ6GMJ153	M 15KOHM, J, 1/10W
R612	ERJ6GMJ823	M 82KOHM, J, 1/10W
R613	ERJ6GMJ823	M 82KOHM, J, 1/10W
R614	ERJ6GMJ682	M 6.8KOHM, J, 1/10W
R701	UN11010	FUSE RESISTOR ⚠
R702	ERJ6GMJ184	M 180KOHM, J, 1/10W
R703	ERJ6GMJ394	M 390KOHM, J, 1/10W
R704	ERJ6GMJ333	M 33KOHM, J, 1/10W
R705	ERJ6GMJ334	M 330KOHM, J, 1/10W
R706	ERJ6GMJ101	M 100OHM, J, 1/10W
R707	ERJ6GMJ822	M 8.2KOHM, J, 1/10W
R708	ERJ6GMJ223	M 22KOHM, J, 1/10W
R709	ERJ6GMJ222	M 2.2KOHM, J, 1/10W
R710	ERJ6GMJ102	M 1KOHM, J, 1/10W
R711	ERJ6GMJ102	M 1KOHM, J, 1/10W
R721	ERJ6GMJ563	M 56KOHM, J, 1/10W
R722	ERJ6GMJ683	M 68KOHM, J, 1/10W
R801	UN11004	FUSE RESISTOR ⚠
R802	ERJ6GMJ332	M 3.3KOHM, J, 1/10W
R803	ERJ6GMJ332	M 3.3KOHM, J, 1/10W
R804	ERJ8GC0R00	M 0OHM, 1/8W
VR151	EVM7GAX00B33	SUB CONTRAST 3KOHMB
VR152	EVM7NGA00B15	COLOUR SYNC. 100KOHMB
VR154	EVNDAAA00B54	COLOUR 50KOHMB
VR157	EVM7NGA00B34	SUB BRIGHT 30KOHMB
VR401	EVM7NGA00B14	fo ADJ. 10KOHMB
VR601	EVLB1AA01B14	BRIGHT 10KOHMB
VR602	EVM7NGA00B53	R-ADJ. 5KOHMB
VR603	EVM7NGA00B53	B-ADJ. 5KOHMB
VR604	EVM7NGA00B53	COM ADJ. 5KOHMB
VR701	EVM7NGA00B13	+B ADJ. 1KOHMB
VR702	EVM7NGA00B14	B OSC. ADJ. 10KOHMB
	CAPACITORS	
C131	ECEV1CAN100P	E 10UF, 16V
C132	ECUX1H101JC	C 100PF, J, 50V
C133	ECUX1H150JC	C 15PF, J, 50V
C134	ECST1EY474ZL	T 0.47UF, 25V

Ref. No.	Part No.	Description
C151	ECEV1CA100R	E 10UF, 16V
C153	ECUX1H560JC	C 56PF, J, 50V
C154	ECUX1H390JC	C 39PF, J, 50V
C155	ECUX1E104ZF	C 0.1UF, Z, 25V
C156	ECUX1E104ZF	C 0.1UF, Z, 25V
C157	TAC48474T16V	C 0.47UF, 16V
C158	ECUX1H331JC	C 330PF, J, 50V
C159	ECEV1HA3R3R	E 3.3UF, 50V
C160	ECUX1E104ZF	C 0.1UF, Z, 25V
C161	ECUX1H180JC	C 18PF, J, 50V
C162	ECUX1E104ZF	C 0.1UF, Z, 25V
C163	ECUX1H470JC	C 47PF, J, 50V
C164	TAC48105T16V	C 1UF, 16V
C165	TAC48105T16V	C 1UF, 16V
C166	ECUX1H103ZFN	C 0.01UF, Z, 50V
C167	ECUX1H103ZFN	C 0.01UF, Z, 50V
C168	ECUX1H103ZFN	C 0.01UF, Z, 50V
C169	ECUX1H103ZFN	C 0.01UF, Z, 50V
C170	ECUX1H221JC	C 220PF, J, 50V
C171	ECUX1H221JC	C 220PF, J, 50V
C172	ECUX1E104ZF	C 0.1UF, Z, 25V
C401	ECEV0JA101P	E 100UF, 6.3V
C402	ECUX1H681JC	C 680PF, J, 50V
C403	ECEV1CA100R	E 10UF, 16V
C404	ECUX1H103ZFN	C 0.01UF, Z, 50V
C405	ECUX1H100DTN	C 10PF, D, 50V
C406	ECUX1H102KBN	C 1000PF, K, 50V
C407	ECST1CY105ZR	T 1.0UF, 16V
C408	ECUX1H273ZF	C 0.027UF, Z, 50V
C409	ECUX1H391JCN	C 390PF, J, 50V
C410	ECUX1H103ZFN	C 0.01UF, Z, 50V
C411	ECUX1H102KBN	C 1000PF, K, 50V
C412	ECUX1H152KBN	C 1500PF, 50V
C413	ECUX1H103ZFN	C 0.01UF, Z, 50V
C414	ECUX1H060CCN	C 6PF, 50V
C415	ECUX1H220JCN	C 22PF, J, 50V
C416	ECUX1H120JCN	C 12PF, J, 50V
C417	ECUX1H330JCN	C 33PF, J, 50V
C418	ECUX1H180JCN	C 18PF, J, 50V
C419	ECUX1H120JCN	C 12PF, J, 50V
C420	ECUX1H330JCN	C 33PF, J, 50V
C421	ECUX1H180JCN	C 18PF, J, 50V
C422	ECUX1H103ZFN	C 0.01UF, Z, 50V
C423	ECUX1H680JCN	C 68PF, J, 50V
C424	ECUX1H680JCN	C 68PF, J, 50V
C425	ECUX1H391JCN	C 390PF, J, 50V
C426	ECUX1H681JC	C 680PF, J, 50V
C427	ECUX1H681JC	C 680PF, J, 50V
C428	ECUX1H221JCN	C 220PF, J, 50V
C429	ECUX1H681JC	C 680PF, J, 50V
C430	ECUX1H102KBN	C 1000PF, K, 50V
C431	ECUX1H103ZFN	C 0.01UF, Z, 50V
C432	ECUX1H103ZFN	C 0.01UF, Z, 50V
C433	ECUX1H103ZFN	C 0.01UF, Z, 50V
C434	ECUX1H103ZFN	C 0.01UF, Z, 50V
C501	ECUX1H103KBN	C 0.01UF, K, 50V

TC-MC3U

Ref. No.	Part No.	Description
C502	ECUX1E104ZF	C 0.1UF, Z, 25V
C503	ECUX1H471KC	C 470PF, K, 50V
C504	ECEV0JA470P	E 47UF, 6.3V
C506	ECEV1HA010R	E 1UF, 50V
C507	ECEV1CA470P	E 47UF, 16V
C601	ECEV1CA220P	E 22UF, 16V
C602	ECUX1H103KBN	C 0.01UF, K, 50V
C603	ECUX1H103KBN	C 0.01UF, K, 50V
C604	ECUX1H103ZFN	C 0.01UF, Z, 50V
C605	ECUX1H103ZFN	C 0.01UF, Z, 50V
C701	ECUX1H103ZFN	C 0.01UF, Z, 50V
C702	ECEV1CA470P	E 47UF, 16V
C703	ECEV1CA470P	E 47UF, 16V
C704	ECUX1H473ZF	C 0.047UF, Z, 50V
C705	ECEV1CA100R	E 10UF, 16V
C706	ECUX1H473ZF	C 0.047UF, Z, 50V
C707	ECUX1H152JC9	C 1500PF, J, 50V
C708	ECUX1H102KBN	C 1000PF, K, 50V
C709	ECUX1H103KBN	C 0.01UF, K, 50V
C710	ECUX1H103KBN	C 0.01UF, K, 50V
C721	ECEV0JA101P	E 100UF, 6.3V
C722	ECEV0JA101P	E 100UF, 6.3V
C723	ECEV1CA470P	E 47UF, 16V
C724	ECEV1CA100R	E 10UF, 16V
C725	ECEV1CA100R	E 10UF, 16V
C801	ECEV1CA470P	E 47UF, 16V
C802	ECUX2A562KR9	C 5600PF, K, 100V
C803	TAC45330P2KV	CAPACITOR 2KV, 33P
C804	TAC45330P2KV	CAPACITOR 2KV, 33P
	COILS	
L151	ELJFA150KB	COIL 15u
L152	ELJFA120KB	COIL 12u
L401	ELJFA3R9MB	COIL 3.9u
L402	ELJFA100KB	COIL 10u
L403	ELJFA3R9MB	COIL 3.9u
L404	ELJFA100KB	COIL 10u
L721	ERJ8GC0R00	0OHM JUMPER
L722	ELC05D002	COIL 82u
L801	ELC08D059	COIL 680u
	TRANSFORMERS	
T701	ELL12R715	TRANS. ⚠
T801	ETE19K61AF	TRANS.
	DIODES	
D151	MA152K	DIODE
D152	MA3068M	ZENER DIODE
D602	MA3024	ZENER DIODE
D603	MA3068M	ZENER DIODE
D701	MA701	DIODE
D702	MA152K	DIODE
D721	MA701	DIODE
D722	MA152K	DIODE
D723	MA152K	DIODE
D724	MA152K	DIODE
	INTEGRATED CIRCUITS	
IC151	AN5372S	IC
IC401	M50184FP	IC

Ref. No.	Part No.	Description
IC501	TVSNJM386MA1	IC
IC601	AN5371S	IC
IC701	FA7610N	IC
	TRANSISTORS	
Q131	2SD601A	TRANSISTOR
Q132	2SD601A	TRANSISTOR
Q133	2SD601A	TRANSISTOR
Q701	2SD1119	TRANSISTOR
Q801	2SD874A	TRANSISTOR
Q802	2SD874A	TRANSISTOR
	OTHERS	
CF151	TAFTPS443MC	CERAMIC FILTER
FL1	TJC85323	TERMINAL
FL2	TJC85323	TERMINAL
FL3	TJC85323	TERMINAL
FL4	TJC85323	TERMINAL
JS1	TJS8A8110	CONNECTOR
JS101	TJS8A8750	A/V JACK
JS501	TJS8A8750	EARPHONE JACK
JS701	TJS8A8021	DC SOCKET
NLA	TNP890239-31	MAIN BOARD
S701	TSE80349	POWER SWITCH
X151	TSS2031-N	CRYSTAL OSC.
	BATTERY CASE	
	TNQ80936	BATTERY CASE
	TES8339-1	SPRING B (-)
	TES8340-1	SPRING C (+)
	TES8341	SPRING A (+/-)
	TJC85318-1	TERMINAL
	TKX890701	BRACKET
	TKY890905-1	COVER
	TQF87285-1	LABEL
	TSX9151	DC POWER CORD
	TXAKX180931	BRACKET ASSEMBLY
	TXAKY280936	BODY ASSEMBLY
	XTN17+6JFZ	SCREW
	TNP800457-11	CIRCUIT BOARD
D751	MA711	DIODE
JS75	TJS8A8020-1	DC SOCKET
R751	UN11010	FUSE RESISTOR ⚠
R752	ERX12SJ1R2	RESISTOR 1.2OHM, 1/2W
SW75	TSE80935	SWITCH

Printed in Japan
88114500 Ⓗ 1118